WHIRLWINDSTEEL
BUILDINGS & COMPONENTS

TECHNICAL ERECTION MANUAL WEATHER SNAP™

8234 Hansen Road
Houston, TX 77075

(800) 324 9992 Toll Free

(832) 553 4992 Fax

IMPORTANT NOTICE

PLEASE READ THIS MANUAL COMPLETELY PRIOR TO BEGINNING INSTALLATION OF THE WEATHER SNAP PANEL.

IF THERE IS A CONFLICT BETWEEN PROJECT ERECTION DRAWINGS PROVIDED AND/OR APPROVED BY WHIRLWIND STEEL BUILDINGS, INC AND DETAILS IN THIS MANUAL, PROJECT ERECTION DRAWINGS WILL TAKE PRECEDENCE.

©Whirlwind Steel buildings, Inc. All Rights Reserved.

Descriptions and specifications contained herein were in effect at the time this publication was approved for printing. In a continuing effort to refine and improve products, Whirlwind reserves the right to discontinue products at any time or change specifications and/or designs without incurring obligation. To insure you have the latest information available, please inquire or visit our Web Site at www.whirlwindsteel.com

TABLE CONTENTS

ROOFING SYSTEMS
General Description WS-4
Architect/Engineering Information WS-5

ENGINEERING
UL Requirements WS-6
16" Properties/Load Tables WS-7

GENERAL INFORMATION
Product Check List. WS-8-9
Ordering Information WS-10
Installation Guides. WS-10
Preparatory Requirements WS11
Unloading WS-12-13
Handling/Panel Storage WS-14

DESIGN
Typical Details
Panel WS-15
Endlap WS-16
Floating Ridge WS-17
Vented Ridge WS-18
Fixed Ridge WS-19
Hip WS-20
Floating Peak WS-21
Fixed Rake WS-22
Floating Rake WS-23
Fixed Eave. WS-24
Valley WS-25-26
Field Hemming Panel End. WS-27
Gutter. WS-28
Eave Trim WS-29
Parapet Details
Floating Rake WS-30
Fixed Rake WS-31
High Side Eave WS-32
Roof Transition. WS-33
Details Over Wood
Endlap WS-34
Fixed Ridge/Hip WS-35
Vented Ridge WS-36
Floating Ridge WS-37
Fixed Peak. WS-38
Gutter. WS-39
Floating Rake WS-40
Valley with Offset Cleat WS-41
Parapet Floating Rake. WS-42
Parapet High Side Eave. WS-43
Eave Trim with Offset Cleat WS-44
Roof Transition. WS-45
Rigid Board Insulation Over Metal Deck WS-46
Snow Gutter WS-47

GENERAL DESCRIPTION

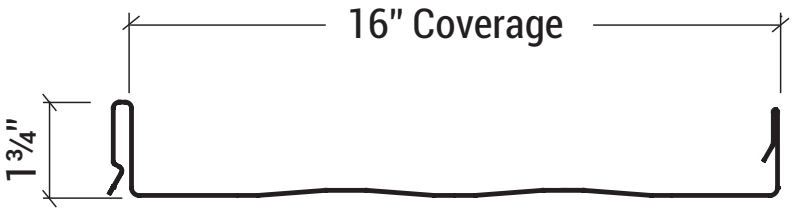

Coverage Width	16”
Minimum Slope	3: 12
Panel Attachment	UL90 Clips (Concealed Fastening Systems)
Panel Substrate	Galvalume ® (standard)
Gauge	24 GA
Finishes	Striated (Standard)*
Coatings	Galvalume Clear Acrylic, Fluropon® PVDF (Kynar®)

Other Colors, Finishes, Gauges, and materials may be available; please inquire.
*Striated panels are standard to reduce “oil canning”.

ARCHITECT/ENGINEER/ ERECTOR INFORMATION

1. The minimum recommended slope is 3:12. For slopes less than 3:12, call Whirlwind.
2. Roofs with no endlaps may be erected from either direction. For panel lengths over 45', please inquire.
3. Panels can be installed on roofs with a transition by using Whirlwind's die-formed rib covers.
4. Heavier gauges and striations minimize oil canning. Oil canning is not a cause for rejection.
5. The substructure (eave to ridge) must be on plane with a tolerance of 1/2" in 20' and 3/8" in 40'.
6. All panels require end sealant at eave and valley conditions; however, for illustration purposes, this sealant is not shown on all drawings. See Page WS-15 for panel end sealant detail.
7. For proper fastener application, see Page WS-9.
8. All drawings and trim dimensions in this manual are based on a 1-1/4" wall thickness (Super Span Panel). Other wall panel thicknesses may affect various dimensions on drawings and trim. If you have any questions, call Whirlwind.
9. The information in this manual is believed to be correct and accurate. It should not be used for any specific application without being reviewed by a registered professional engineer. All metal roofs should be designed by a registered, professional engineer for loads specified by the governing code, including the higher pressures encountered at the edge zones of the roof.
10. Avoid restricting the thermal expansion and contraction of the Weather Snap-16 panels. (ie: Do not attach panels to the substructure at both the eave and ridge.)
11. Weather Snap-16 panels are not designed to be work platforms. Avoid any unnecessary foot traffic on Weather Snap-16 panels. If foot traffic is required, protect the roof panels by using some type of roof pad, temporary deck, or walkway.
12. When installing Weather Snap-16 panels over open framing with blanket insulation: (A) install insulation parallel to purlins or joists, or (B) install insulation across purlins or joists and compress it with pinch bars.
13. A vapor retarder may be necessary to protect roofing components when high interior humidity is a factor. The need for a vapor retarder, as well as the type, placement and location should be determined by an architect or engineer. The following are examples of conditions that may require a vapor retarder: (A) Projects where outside winter temperatures below 40°F are anticipated and where average winter interior relative humidity of 45% or greater is expected. (B) Building usages with high humidity interiors, such as indoor swimming pools, textile manufacturing operations, food, paper or other wet-process industrial plants. (C) Construction elements that may release moisture after the roof is installed, such as interior concrete and masonry, plaster finishes and fuel burning heaters.

CAUTION

Diaphragm capabilities and purlin stability are not provided by Whirlwind's Weather Snap-16 roof system. Therefore, other bracing may be required to conform to any and all code requirements. All roof systems should be designed by a registered professional engineer for loads specified by the governing code(s), including the higher pressure encountered at the edge zones and corner zones of the roof.

UNDERWRITERS LABORATORIES APPROVAL								
Construction Number	Panel Width (In.)	Gauge	Clip Type	Clip Spacing	Substrate	UL-2218 Impact Resistance	UL-263 Fire Rating	UL-580 Rating
254	12″	22 Min.	UL 90	5′-0″	Open Framing	Class 4	Class A	Class 90
254	12″	24 Min.	UL 90	4′-0″	Open Framing	Class 4	Class A	Class 90
255	18″ Max.	24 Min.	UL 90	4′-0″	Open Framing	Class 4	Class A	Class 90
303	18″ Max.	24 Min.	UL 90	4′-0″	Composite System	Class 4	Class A	Class 90
342	18″ Max.	24 Min.	UL 90	4′-0″	Composite System	Class 4	Class A	Class 90
343	18″ Max.	24 Min.	UL 90	3′-0″	Plywood	Class 4	Class A	Class 90
414	18″ Max.	24 Min.	UL 90	3′-0″	Plywood	Class 4	Class A	Class 90
436	18″ Max.	24 Min.	UL 90	4′-0″	Plywood	Class 4	Class A	Class 90
445	12″	22 Min.	UL 90	5′-0″	Open Framing	Class 4	Class A	Class 90
445	12″	24 Min.	UL 90	4′-0″	Open Framing	Class 4	Class A	Class 90
446	18″ Max.	24 Min.	UL 90	4′-0″	Open Framing	Class 4	Class A	Class 90
448	18″ Max.	24 Min.	UL 90	4′-0″	Composite System	Class 4	Class A	Class 90
486	18″ Max.	24 Min.	UL 90	4′-0″	Composite System	Class 4	Class A	Class 90
543	18″ Max.	22 Min.	UL 90	5′-0″	Open Framing	Class 4	Class A	Class 90
543	18″ Max.	24 Min.	UL 90	4′-0″	Open Framing	Class 4	Class A	Class 90
544	18″ Max.	24 Min.	UL 90	4′-0″	Composite System	Class 4	Class A	Class 90

NOTES:

1. Wind uplift test procedures are in accordance with Underwriters Laboratories Standard UL-580 under “Tests for Uplift Resistance of Roof Assemblies”.
2. A detailed installation method is available for each construction number above and can be found in the UL Roofing Materials and Systems Directory. The panel must be installed in a certain manner to achieve the published results.
3. The panel qualifies for a Class A fire rating compliance with Underwriters Laboratories Standard UL-263.
4. The panel system is listed under following Fire Resistance Design Numbers: P224, P225, P227, P230, P233,P237,P510, P512, P701, P711, P803. Refer to the UL Fire Resistance Directory for specific construction methods and hourly ratings.
5. Weather Snap-16 panels carry a Class 4 rating under UL-2218 “Test Standard for Impact Resistance”.

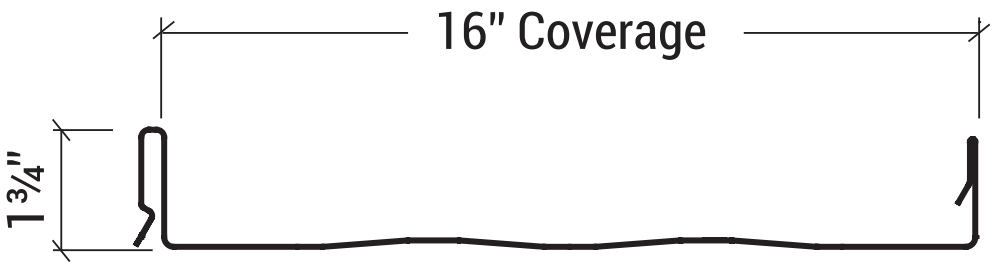

WEATHER SNAP-16 DESIGN PROPERTIES						
			TOP IN COMPRESSION		BOTTOM IN COMPRESSION	
PANEL GAUGE	F_y (KSI)	Weight (PSF)	I_x (In^4-Ft)	M_a (Kip-In/Ft)	I_x (In^4-Ft)	M_a (Kip-In/Ft)
24	50	1.26	0.0803	1.6467	0.0855	1.7817

NOTES:
1. Section properties are based on the AISI Cold-Formed Steel Design Manual, 2001 Edition.

24 Gauge - NET ALLOWABLE LOADS IN PSF FOR SUPPORT SPACING								
SPAN TYPE	LOAD TYPE	PANEL WEIGHT HAS BEEN APPLIED						
		2.0	2.6	3.0	3.6	4.0	4.6	5.0
3-SPAN or More	GRAVITY	196	157	131	109	84	66	54
	UPLIFT	48	45	42	39	36	32	29

NOTES:
1. Gravity loads based on design properties of the panel profile and beam analysis.
2. Gravity loads meet L/180 deflection criteria.
3. Uplift loads based on two (2) fasteners per clip and ASTME 1592 testing with a safety factor of 1.61
4. Uplift allowable have not been increased 1/3 for wind.
5. Uncoated steel thickness shall be a minimum of 95% of the thickness shown above.

TECHNICAL ERECTION MANUAL WEATHER SNAP-16™

PRODUCT CHECKLIST

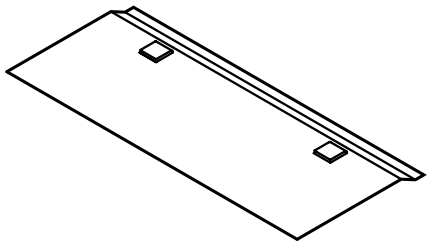

☐ BACK-UP PLATE
WSBP16 - 16"

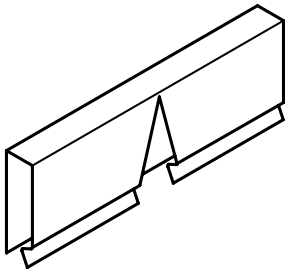

☐ RIB COVER
RC-650

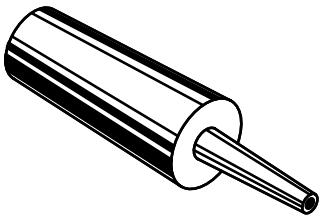

TUBE SEALANT
☐ POLYURETHANE - WHITE
☐ ACRYLIC - CLEAR

☐ TRIPLE BEAD
TAPE SEALER

☐ DOUBLE BEAD
TAPE SEALER

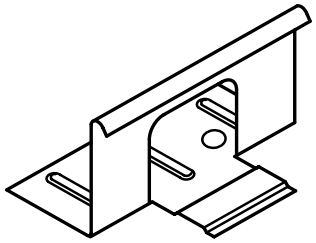

☐ CLIP, UL90
WSCUL

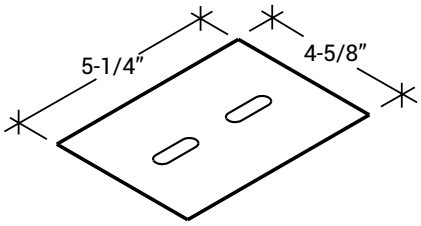

☐ BEARING PLATE STANDARD
BP-1

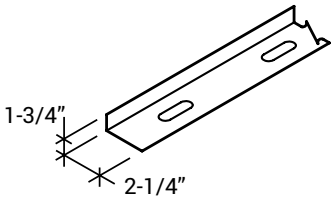

FLOATING RAKE SUPPORT
☐ WSRSP (RED-OXIDE)
☐ WSRSG (GALVANIZED)

☐ HIP/VALLEY PLATE

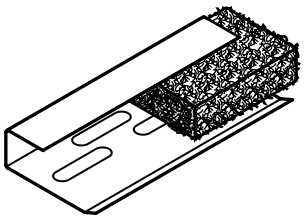

☐ METAL VENT MATERIAL
PRE-VENT

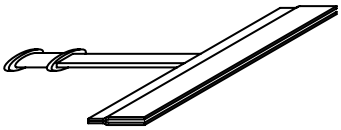

☐ PANEL HEMMING TOOL
WSHT

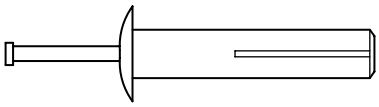

- Special application fastener
- For use on masonry

☐ ¼" X 1 ¼" NAIL DRIVE
MASONRY ANCHOR

PRODUCT CHECKLIST

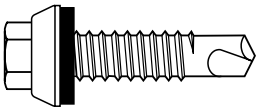

- ☐ #12 -14 X 1¼" HTZ TEK 2 SELF-DRILLING

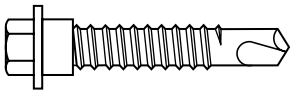

- ☐ ¼" X 14 X 1¼" SHOULDER TEK 2 Ò" HEX WASHER HEAD, NO WASHER

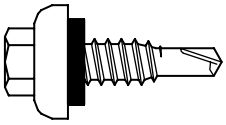

- ☐ ¼" - 14 X ⅞" LAP TEK LONG LIFE SELF-DRILLER, Ò" HEX WASHER HEAD WITH SEALING WASHER

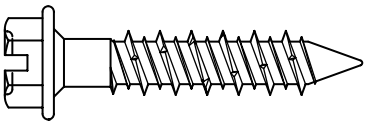

- ☐ ¼" X 1¼" HWH TAPCON (BLUE CLIMASEAL FINISH)

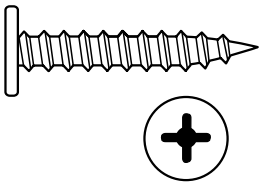

- ☐ #10-12 X 1 PANCAKE QUADREX

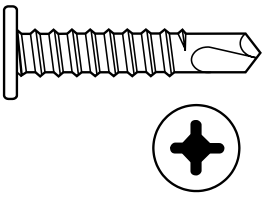

- ☐ #10-12 X 1 PANCAKE QUADREX TEK

- Trim to trim connections
- Trim to panel

- ☐ ⅛" X 3/16" POP RIVET

- "Z" Closure to angle at floating hip

- ☐ ⅛" X ⅜" POP RIVET

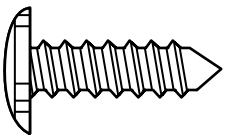

- ☐ 14 X 1⅝", DECK SCREW DRILLER #3 PHILLIPS TRUSS HEAD

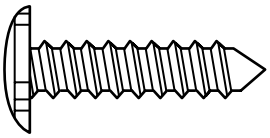

- ☐ 14 X 3", DECK SCREW DRILLER #3 PHILLIPS TRUSS HEAD

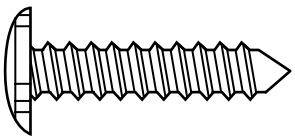

- ☐ 14 X 4½", DECK SCREW DRILLER #3 PHILLIPS TRUSS HEAD

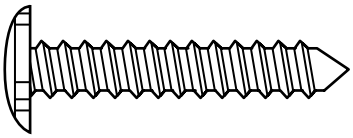

- ☐ 14 X 6", DECK SCREW DRILLER #3 PHILLIPS TRUSS HEAD

ORDERING INFORMATION

When ordering Weather Snap-16 panels without technical assistance from Whirlwind, the following must be provided:

1. Panel Length - The length of each panel should include the proper overhang at the eave, endlap, and peak as required. Refer to specific details in this manual for the proper overhang at these locations. Add 1-1/2" to the panel length for all panels to be hemmed as shown on page WS-26.

2. If your specific detail is not in this manual or if you have questions concerning panel length, designation, or product application, call your Whirlwind sales representative.

INSTALLATION GUIDELINES

I. Pre-Order
   A. Prior to ordering panels, all dimensions should be confirmed by field measurement.

II. Jobsite Storage and Handling
   A. Check the shipment against the shipping list.
   B. Damaged material must be noted on Bill of Lading.
   C. Panel crates should be handled carefully. A spreader bar of appropriate length is recommended for hoisting.
   D. Check to see that moisture has not formed inside the bundles during shipment. If moisture is present, panels should be un-crated and wiped dry, then re-stacked and loosely covered so that air can circulate between the panels.

III. Application Checklist
   A. Check substructure for proper alignment and uniformity to avoid panel distortion.
   B. Periodic check of panel alignment is crucial to proper panel alignment.
   C. If there is a conflict between this manual and the erection drawings, the erection drawings will take precedence.

PREPARATORY REQUIREMENTS

1. Make sure a rake angle or an alternate structural flat surface has been installed on top of the purlins to accept the "Rake Support".
2. The walls do not have to be erected before the roof is installed. However, for the purpose of this manual, we have assumed that the wall panels have been installed.
3. The substructure (eave to ridge) must be on plane tolerance of 1/4" in 20' and 3/8" in 40'.
4. It is critical that the purlins or bar joists at the ridge and endlaps be located exactly as detailed and that they are straight from rafter to rafter. Any mislocation or bowing of these members can cause the fasteners at the ridge or endlaps to foul as the panels expand and contract.
5. Peak Purlin Spacing
    - Floating Ridge: 18" (9" from center line of ridge to web of purlin).
    - Fixed Ridge: 10" (5" from center line of ridge to web of purlin).

CAUTION

Application and design details are for illustration purposes only, and may not be appropriate for all environmental conditions or building designs. Projects should be engineered to conform to applicable building codes, regulations, and accepted industry practices.

WARNING

Diaphragm capabilities and purlin stability are not provided by Whirlwind's Weather Snap-16 roof system. Therefore, other bracing may be required to conform to any and all code requirements. All roof systems should be designed by a registered professional engineer for loads specified by the governing code(s), including the higher pressure encountered at the edge zones and corner zones of the roof.

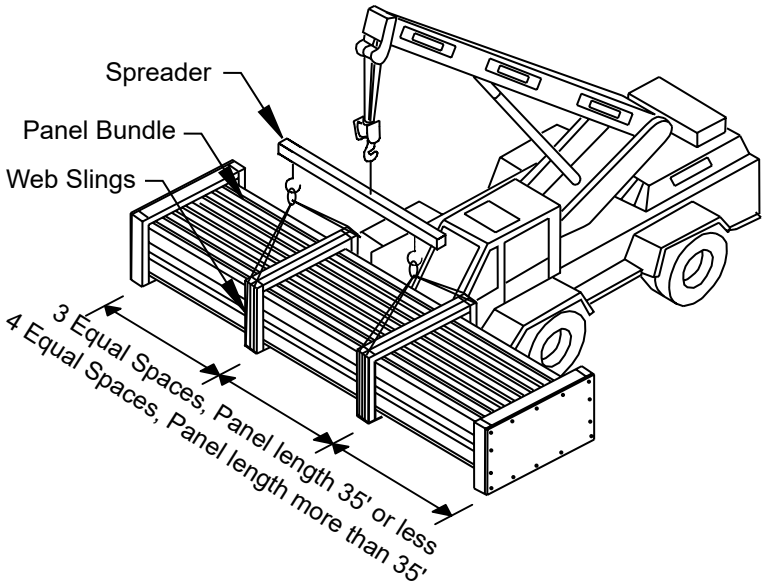

Panels over 25'

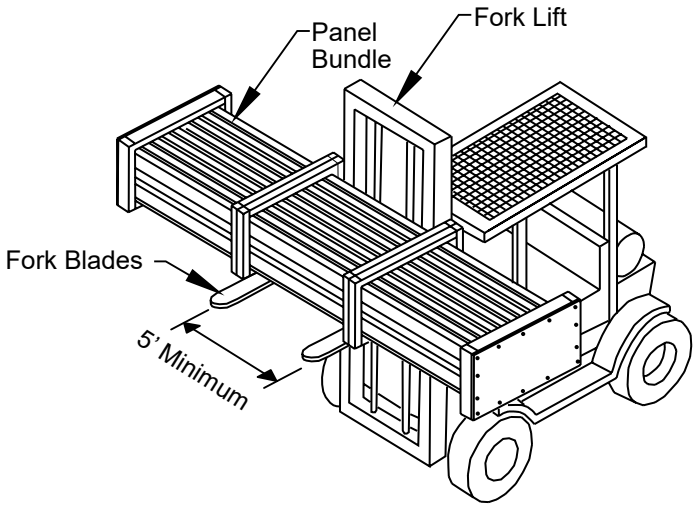

Limited to 25'

UNLOADING

Upon receiving material, check shipment against shipping list for shortages and damages unless they are noted on the shipping list.

Each bundle should be lifted at its center of gravity. Where possible, bundles should remain banded until final placement on roof. If bundles must be opened, they should be retied before lifting.

When lifting bundles with a crane, a spreader bar and nylon straps should be used. NEVER USE WIRE ROPE SLINGS OR CHAINS THEY WILL DAMAGE THE PANELS.

When lifting bundles with a forklift, forks must be a minimum of five feet apart. Do not transport open bundles. Drive slowly when crossing rough terrain to prevent panel buckling.

CAUTION
Improper unloading and handling of bundles and crates may cause bodily injury or material damage. The manufacturer is not responsible for bodily injuries or material damages during unloading and storage.

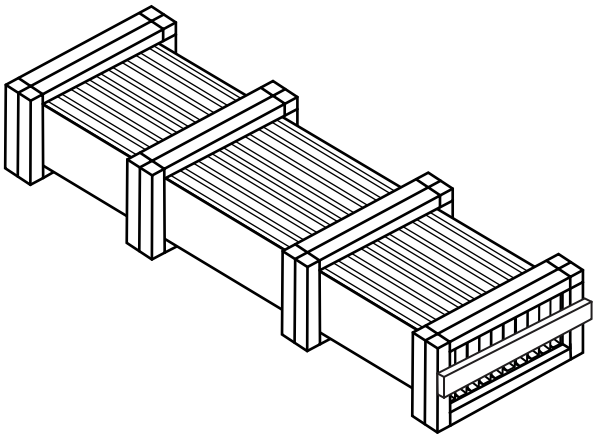

UNLOADING
(Continued)

BLOCK AND BAND

This method of bundling is used for orders that are to be picked up by the customer or shipped by common carrier. 2X4's are strapped under the bundles to allow access for straps or a forklift. Bundle less than 25' long can be handled by a forklift. The fork-lift should have at least 5' between forks. Bundles longer than 25' should be lifted utilizing a spreader bar with nylon straps.

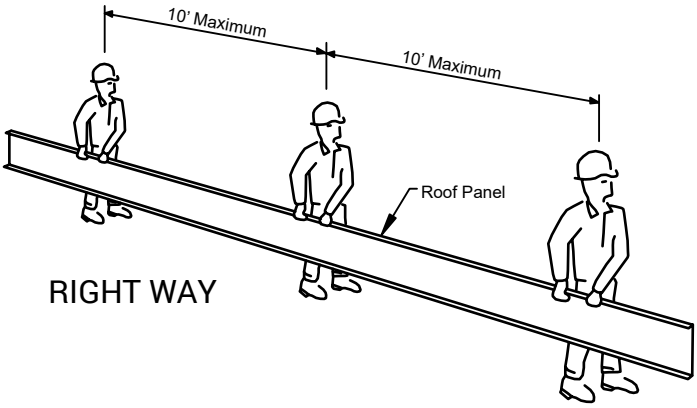

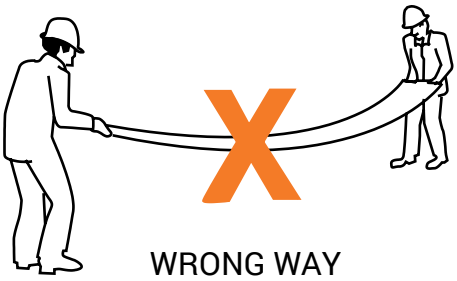

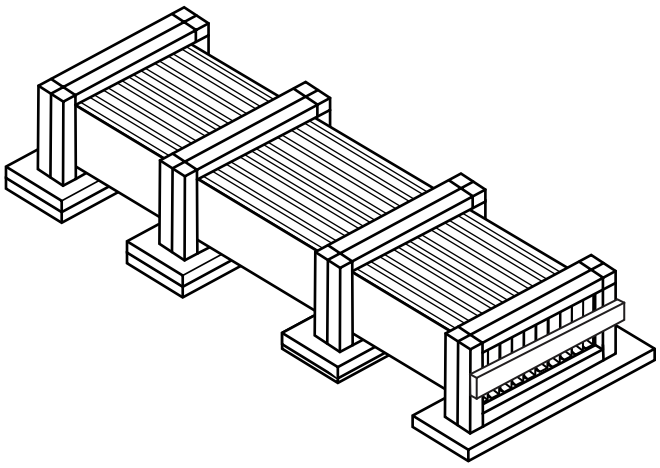

HANDLING/PANEL STORAGE

Standing on one side of the panel, lift it by the seam. If the panel is over 10' long, lift it with two or more people on one side of the panel too prevent buckling.

Do not pick panels up by the ends.

NOTE
Protective gloves should always be used while handling panels. OSHA safety regulations must be followed at all times.

Store bundle sheets off the ground sufficiently high enough to allow air circulation beneath bundle and to prevent rising water from entering bundle. Slightly elevate one end of bundle. Prevent rain from entering bundle by covering with tarpaulin, making provision for air circulation between draped edges of tarpaulin and the ground. **PROLONGED STORAGE OF SHEETS IN A BUNDLE IS NOT RECOMMENDED**. If conditions do not permit immediate erection, extra care should be taken to protect sheets from white rust or water marks.

Check to see that moisture has not formed inside the bundles during shipment. If moisture is present, panels should be uncrated and wiped dry, then restacked and loosely covered so that air can circulate between the panels.

TYPICAL DETAILS
PANEL

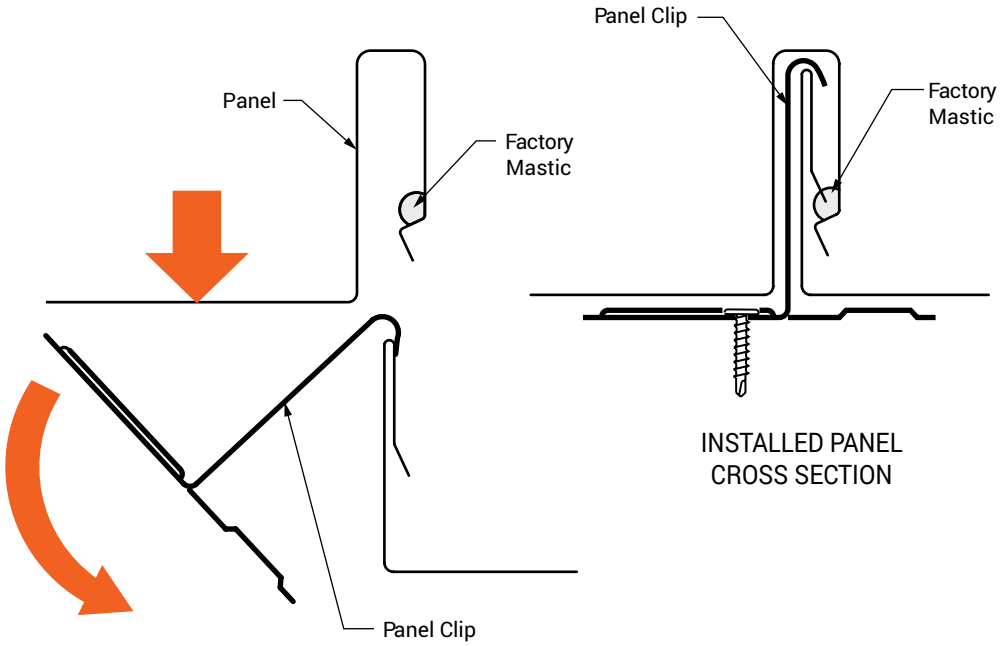

INSTALLED PANEL CROSS SECTION

PANEL CLIP INSTALLATION

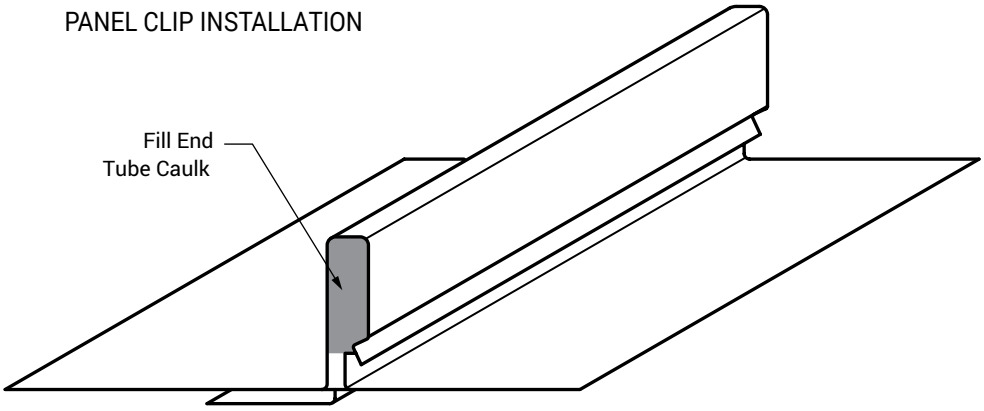

PANEL END SEALANT DETAIL

NOTES:
1. Fill end of panel seam at eave and valleys with tube caulk.
2. For UL90 rating, UL90 clips with two fasteners must be used.

TYPICAL DETAILS ENDLAP

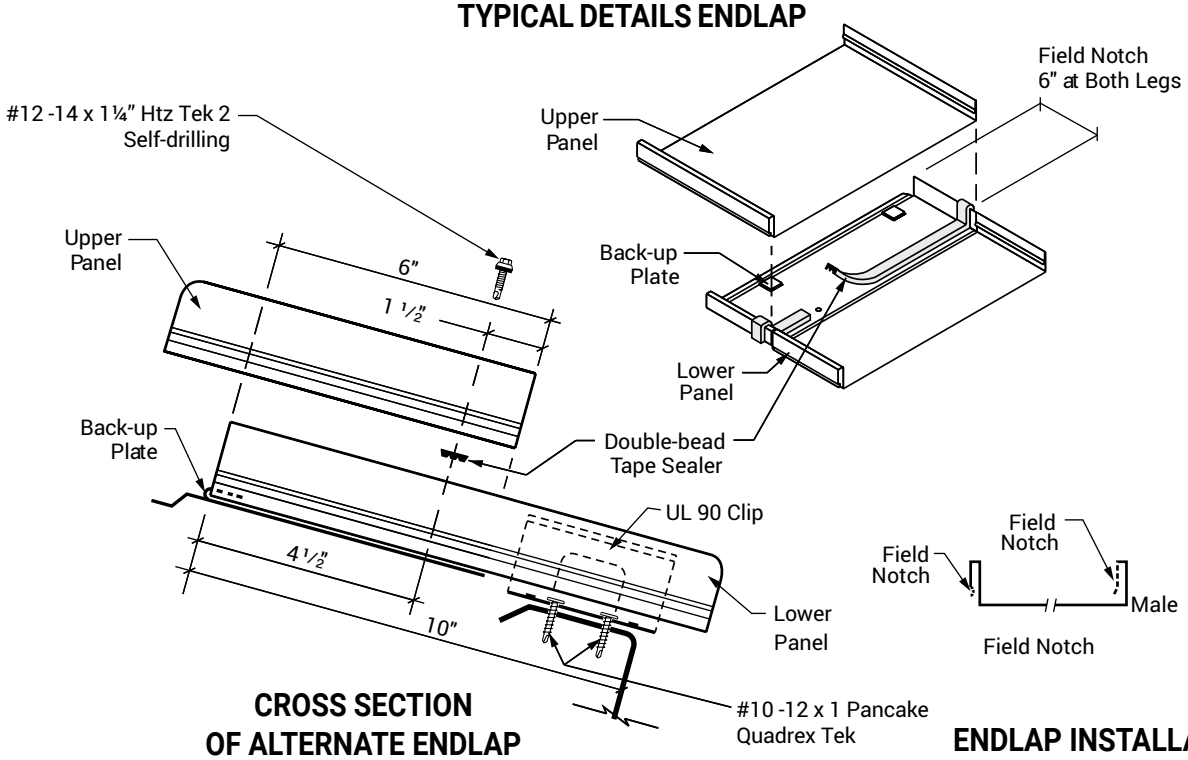

CROSS SECTION OF ALTERNATE ENDLAP

ENDLAP INSTALLATION SEQUENCE

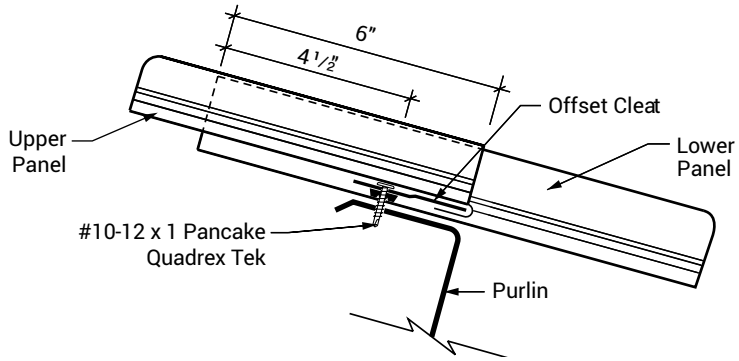

CROSS SECTION OF ALTERNATE ENDLAP

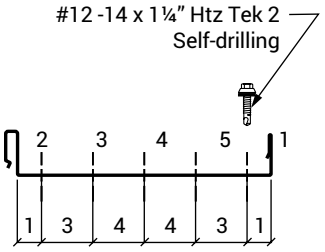

FASTENER SEQUENCE (FOR STANDARD ENDLAP ONLY

NOTES:

1. A UL 90 rating is not available on roofs over open framing with endlaps.
2. The bottom panel must have the first 6" of both legs on the upslope end field notched as shown.
3. Install bottom panel so that the eave has the proper overhang (refer to eave details). The notched upslope end of the panel should be 10" from the web of the purlin.
4. Slide a back-up plate onto the end of the panel; make sure the teeth on top of the back-up plate are on top of the panel.
5. Place Double-Bead tape sealer over the entire width of the panel. It must be placed exactly as shown.
6. Install top panel by snapping it over the notched portion of the bottom panel. Install Fastener #12-14 x 1¼" Htz Tek2 Self-Drilling in the proper sequence.
7. Endlaps require roof erection to proceed from left to right as viewed from the eave looking toward the ridge.
8. When using the alternate endlap method, order the upper endlap panel 1½" longer than normal for the panel hem. See Page WS-10 for ordering information.
9. When using the alternate endlap detail, use the offset cleat method of attachment at the eave or valley and the fixed detail at the ridge or hip.

TYPICAL DETAILS
FLOATING RIDGE

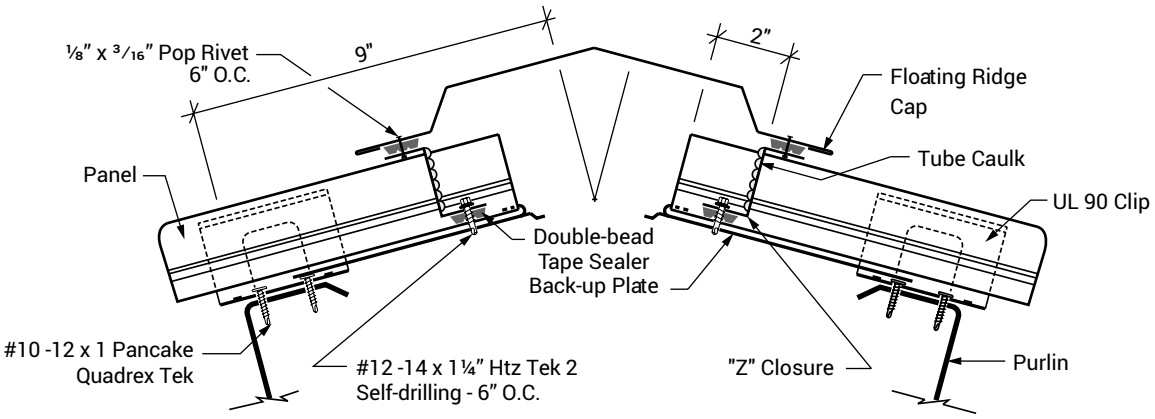

STANDARD RIDGE

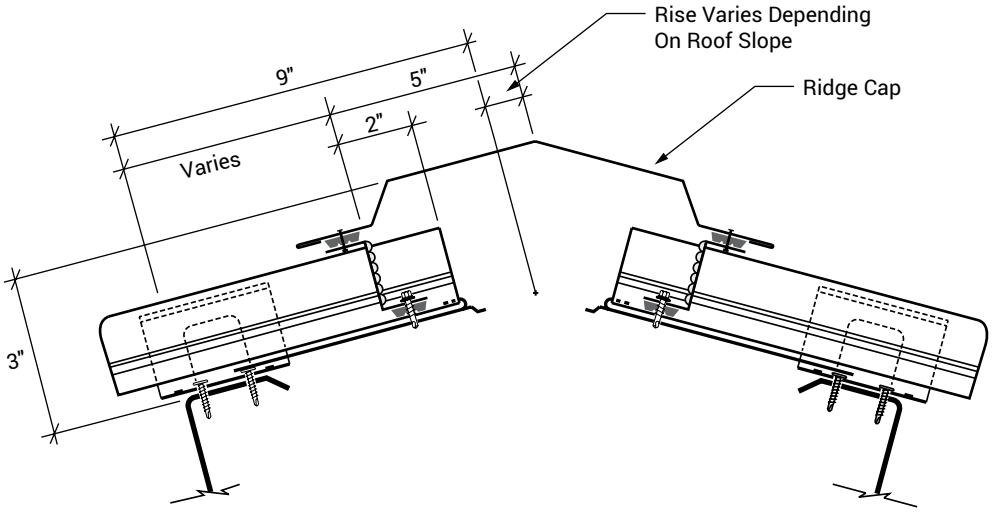

PANEL OVERHANG CALCULATION

NOTES:

STANDARD RIDGE FLASH CONDITIONS

1. Do not use this detail with the offset cleat method of attachment at the eave or valley.
2. Install back-up plate onto end of panel.
3. Field cut "Z" closures to fit panel width.
4. Install Double-Bead tape sealer to panels. The center of tape sealer should be 1-1/2" from end of panel.
5. Install "Z" closures to panels with Fastener #12-14 x 1¼" Htz Tek2 Self-Drilling, 6" O.C. Vertical leg of "Z" closure should be 2" from end of panel.
6. Seal end of "Z" closure to panel seam with tube caulk. Install Double-Bead tape sealer to top of "Z" closure.
7. Attach ridge cap to "Z" closure with Fastener ⅛ x 3/16 Pop Rivet, 6" O.C.

TYPICAL DETAILS
VENTED RIDGE

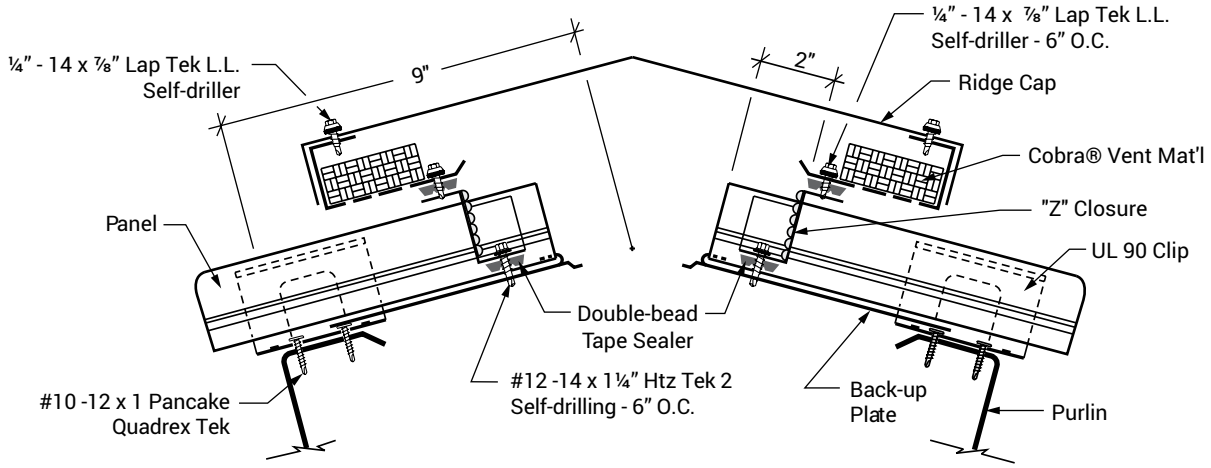

RIDGE WITH METAL PRE-VENT

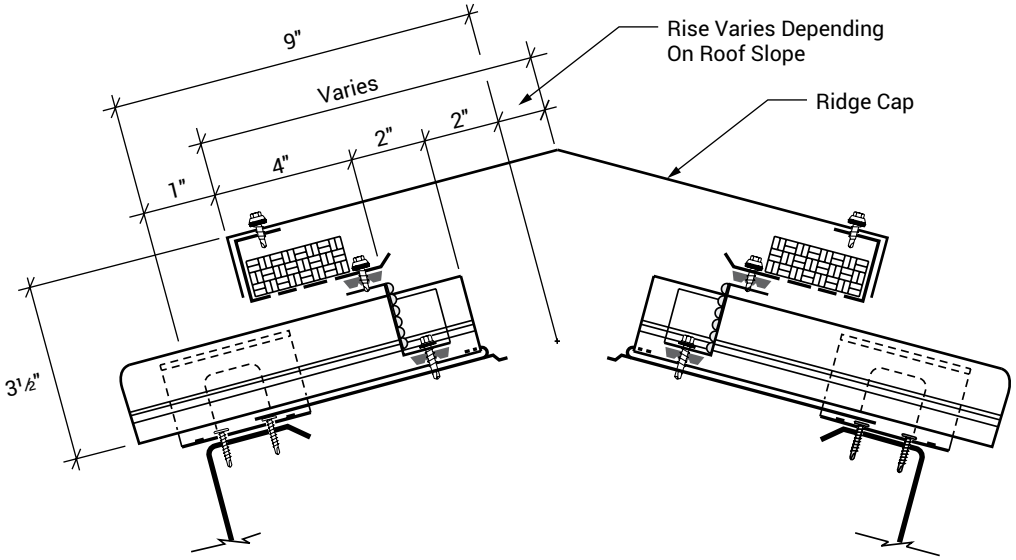

RIDGE CAP WIDTH CALCULATION

NOTES:

RIDGE WITH METAL PREVENT

1. Do not use this detail with the offset cleat method of attachment at the eave or valley.
2. Install back-up plate onto end of panel.
3. Field cut "Z" closures to fit panel width.
4. Install Double-Bead tape sealer to panels. The center of tape sealer should be 1-1/2" from end of panel.
5. Install "Z" closures to panels with Fastener #12-14 x 1¼" Htz Tek2 Self-Drilling, 6" O.C. Vertical leg of "Z" closure should be 2" from end of panel.
6. Seal end of "Z" closure to panel seam with tube caulk. Install Double-Bead tape sealer to top of "Z" closure.
7. Install vented metal to outside closures with Fastener ¼" - 14 x ⅞" Lap Tek L.L. Self-driller at 6" O.C.
8. Attach ridge cap with Fastener ¼" - 14 x ⅞" Lap Tek L.L. Self-driller at 1'-0" O.C. to vented metal.
9. Ridge Cap width will vary depending on the roof slope. Refer to section above for calculating the correct width.

TYPICAL DETAILS

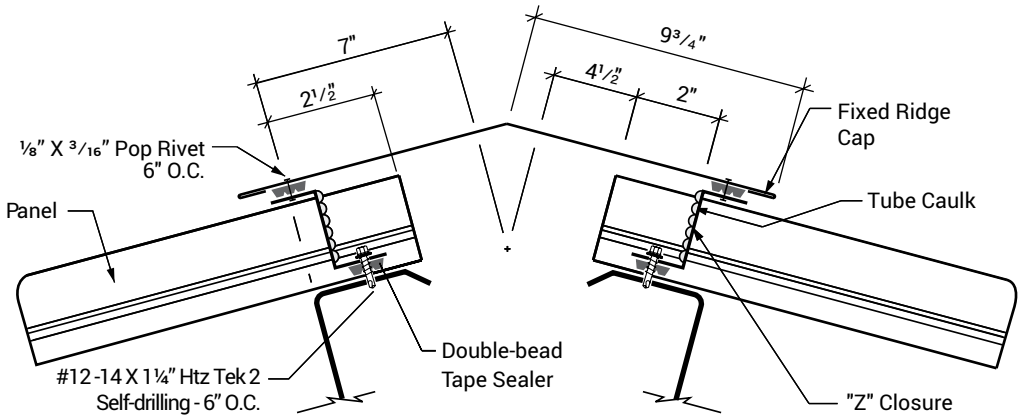

CROSS SECTION OF FIXED RIDGE

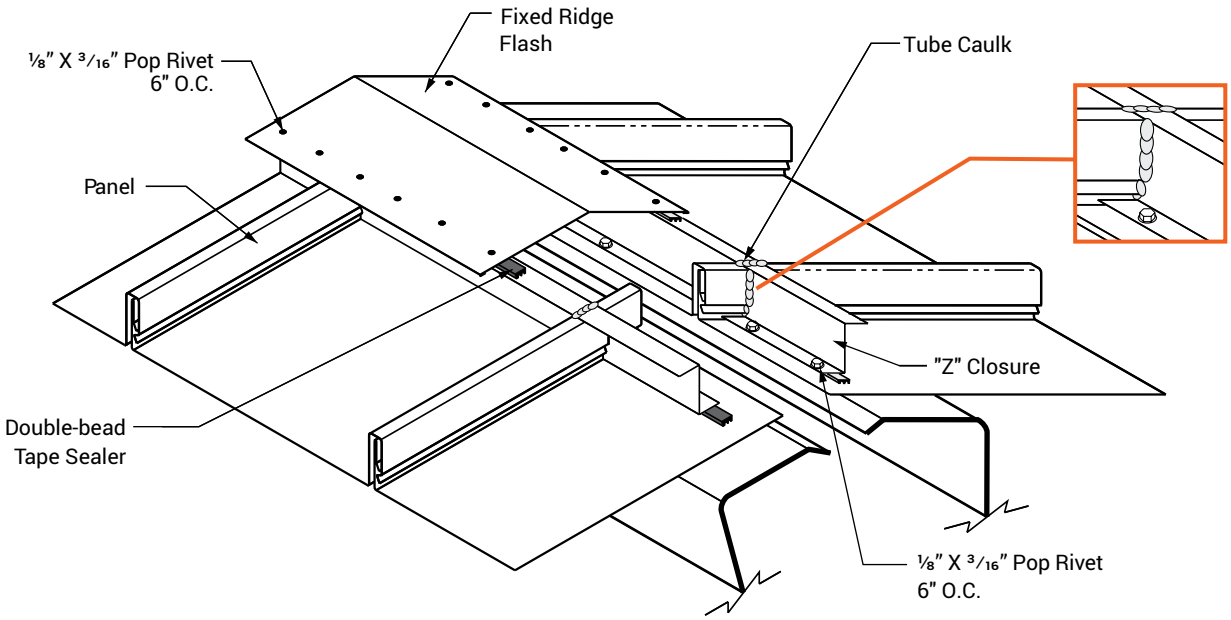

CROSS SECTION OF FIXED RIDGE

NOTES:

1. Do not use this detail with the fixed eave or valley details.
2. Peak purlin spacing for fixed ridge is 5" from the centerline of ridge to web of purlin. If this dimension is not used, a special ridge flash will be required.
3. The upslope end of the panel is 2-1/2" from the web of the peak purlin.
4. Field cut "Z" closures to fit panel width.
5. Install Double-Bead tape sealer to panels. Center of tape sealer should be 1-1/2" from end of panel.
6. Install "Z" closures to peak purlin with Fastener #12 -14 X 1¼" Htz Tek 2 Self-drilling at 6"O.C. Vertical leg of "Z" closure should be 2" from end of panel.
7. Seal end of "Z" closure to panel seam with tube caulk.
8. Attach ridge flash to "Z" closure with Fastener ⅛" x 3/16" Pop Rivet at 6" O.C.
9. Purlin spacing and ridge cap width may need to be adjusted on extremely steep slopes.

TYPICAL DETAILS
HIPS

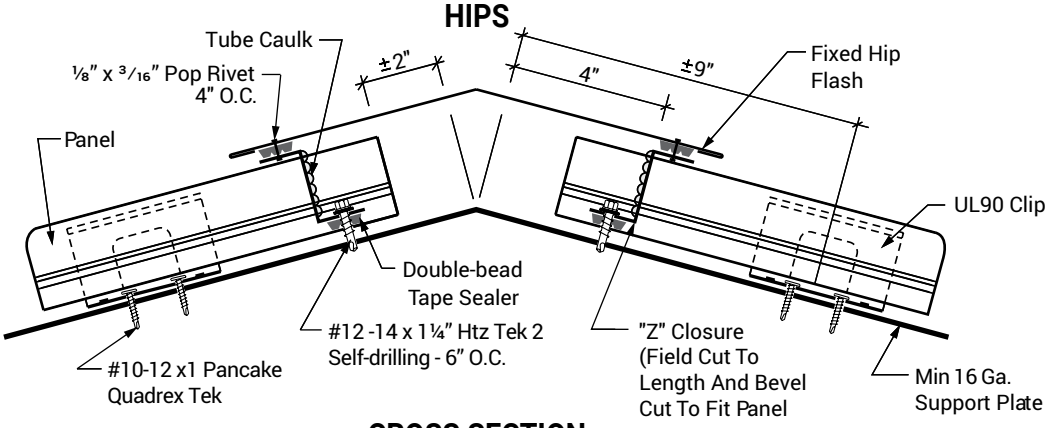

CROSS SECTION
OF FIXED HIP

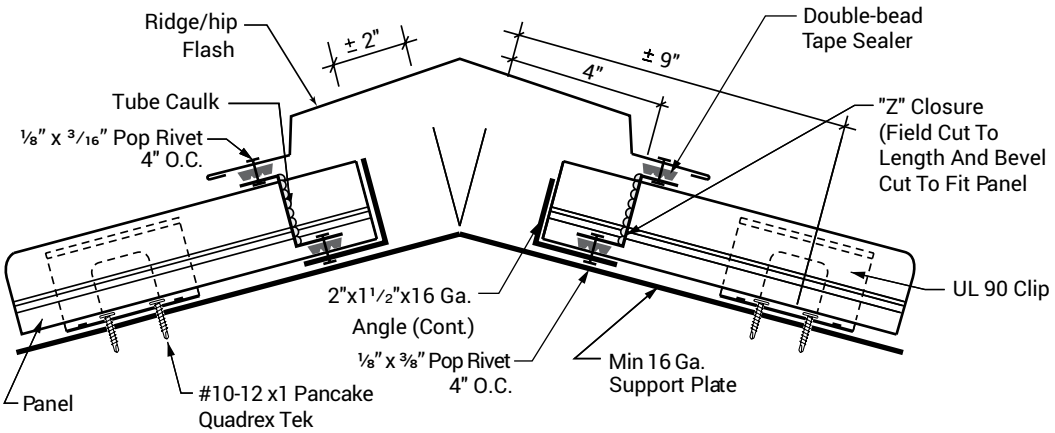

CROSS SECTION
OF FLOATING HIP

NOTES:

FIXED HIP

1. Do not use this detail with the fixed eave or valley details.
2. Hip must be designed to support the panels between the purlins (ie: channel, angle or plate).
3. Bevel cut and install panels to follow slope of hip.
4. Install Double-Bead tape sealer to pans of panels, running parallel to the hip. Center of tape sealer should be 3-1/2" from the center of the hip.
5. Install "Z" closures to panels with Fastener #12 -14 x 1¼" Htz Tek 2 Self-drilling 6" O.C. Vertical leg of "Z" closure should be 4" from center of hip.

FLOATING HIP

1. Do not use this detail with the offset cleat method of attachment at the eave or valley.
2. Bevel cut and install panels to follow slope of hip.
3. Install Double-Bead tape sealer to panels, running parallel to the hip. Center of tape sealer should be 3-1/2" from Center of hip.
4. Slide a length of 2" x 1-1/2" x 16 gauge angle under the panels. Do not fasten 2" x 1-1/2" angle to hip support plate. This will restrain the panels from floating.
5. Bevel cut and install "Z" closures to panels and 2" x 1-1/2" angle with Fastener ⅛" x ⅜" Pop Rivet at 4" O.C. Vertical leg of "Z" closure should be 4" from center of hip. Seal sides and top of "Z" closures to panel seams with tube caulk.

TYPICAL DETAILS FLOATING PEAK

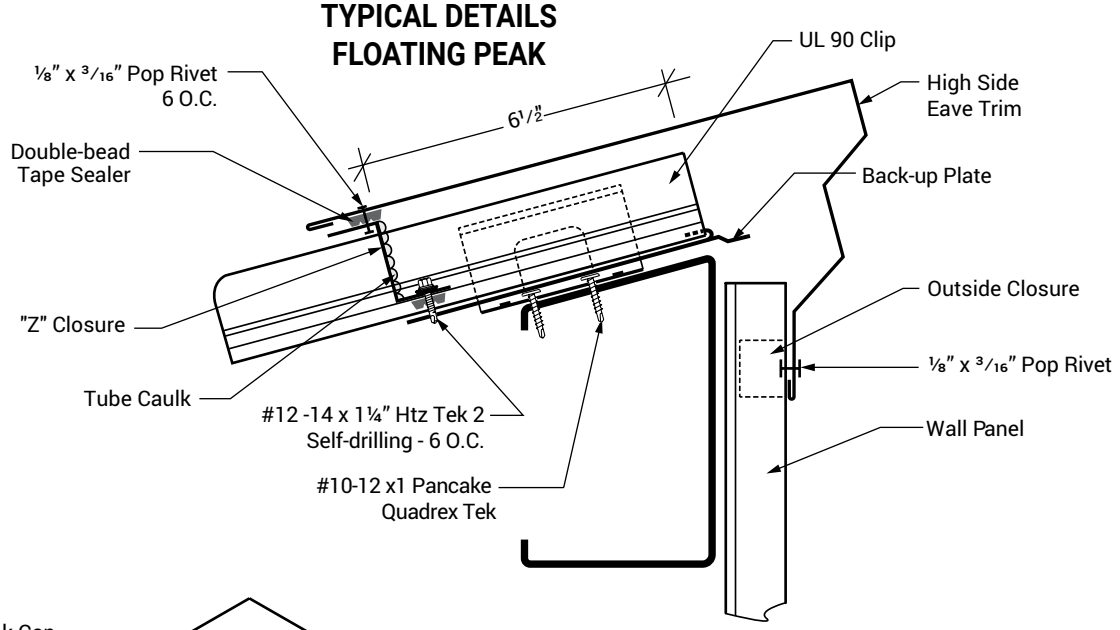

CONTINUOUS CLEAT

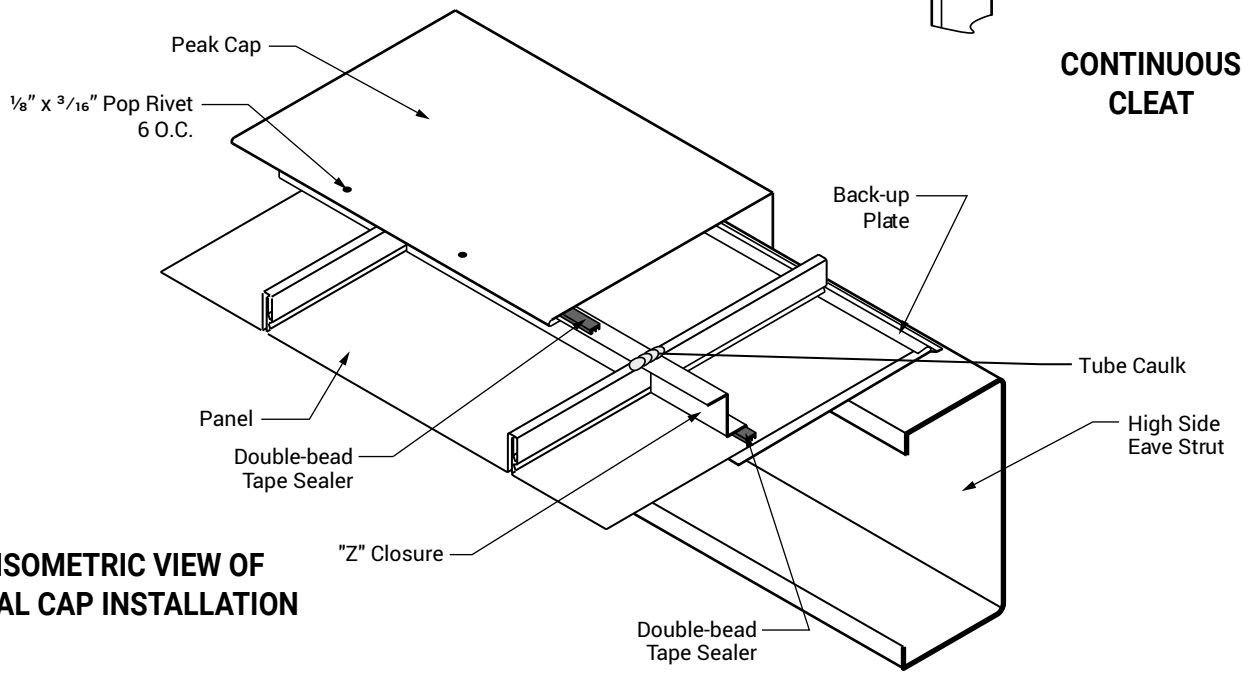

ISOMETRIC VIEW OF PEAL CAP INSTALLATION

NOTES:

1. Do not use this detail with the offset cleat method of attachment at the eave or valley.
2. Install panel and clips.
3. Install backup plate onto end of panel.
4. Field cut "Z" closures to fit panel width.
5. Install Double-Bead tape sealer to panels. The center of tape sealer should be 6" from the end of the panel.
6. Install "Z" closures to panels with Fastener #12 -14 x 1¼" Htz Tek 2 Self-drilling at 6" O.C. Vertical leg of "Z" closure should be 6-1/2" from end of panel.
7. Seal ends of "Z" closures to panel seams with tube caulk. Install Double-Bead tape sealer to top leg of "Z" closure.
8. Attach peak cap to "Z" closure with Fastener ⅛" x 3/16" Pop Rivet at 6" O.C.

TYPICAL DETAILS
FIXED EAVE

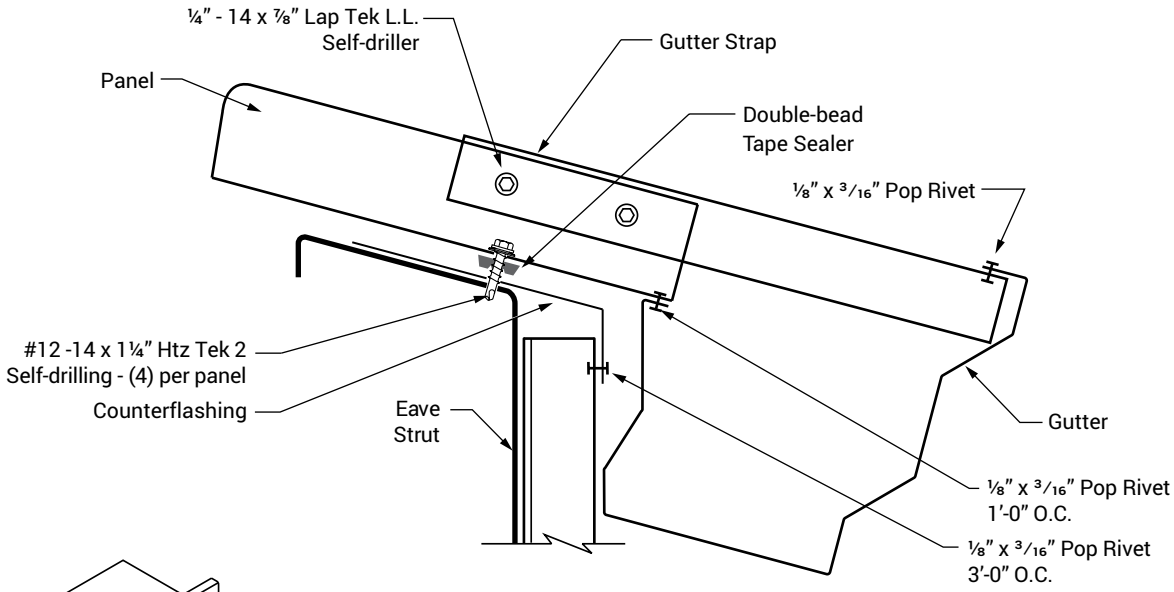

CROSS SECTION OF FIXED EAVE WITH GUTTER

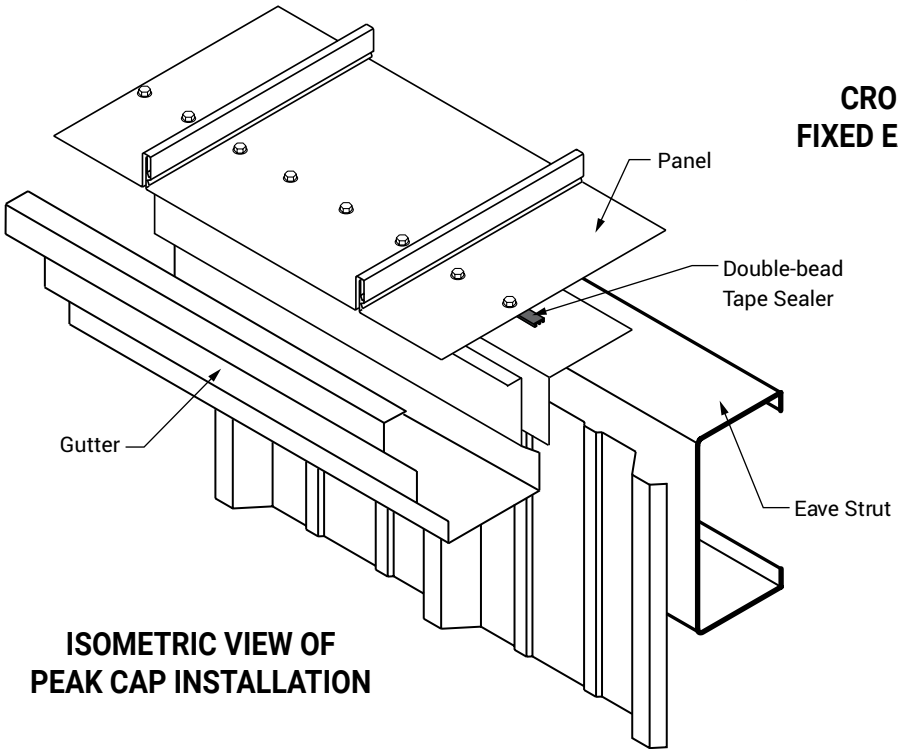

ISOMETRIC VIEW OF PEAK CAP INSTALLATION

NOTES:

1. Do not use this detail with the fixed ridge or hip details.
2. Attach gutter counter flashing to wall panel with Fastener ⅛" x 3/16" Pop Rivet at 3'-0" O.C.
3. Apply Double-Bead tape sealer to slope leg of counter flashing. Edge of tape sealer should align with outside edge of eave strut.
4. Install panel and fasten to eave strut with four Fastener #12 -14 x 1¼" Htz Tek 2 Self-drilling.
5. Attach gutter to roof panel with Fastener ⅛" x 3/16" Pop Rivet at 1'-0" O.C.
6. Install gutter straps every 2'-8" of gutter length. Attach to outside leg of gutter with Fastener ⅛" x 3/16" Pop Rivet and to roof panel high rib with (2) Fastener ¼" - 14 x ⅞" Lap Tek L.L. Self-driller.
7. See "Panel End Sealant Detail" on page WS-15 to seal panel ends.
8. The above gutter should not be used in areas that experience snow loads of 20 PSF or higher. See page WS-50 for the gutter detail for these areas.

TYPICAL DETAILS
FLOATING RAKE

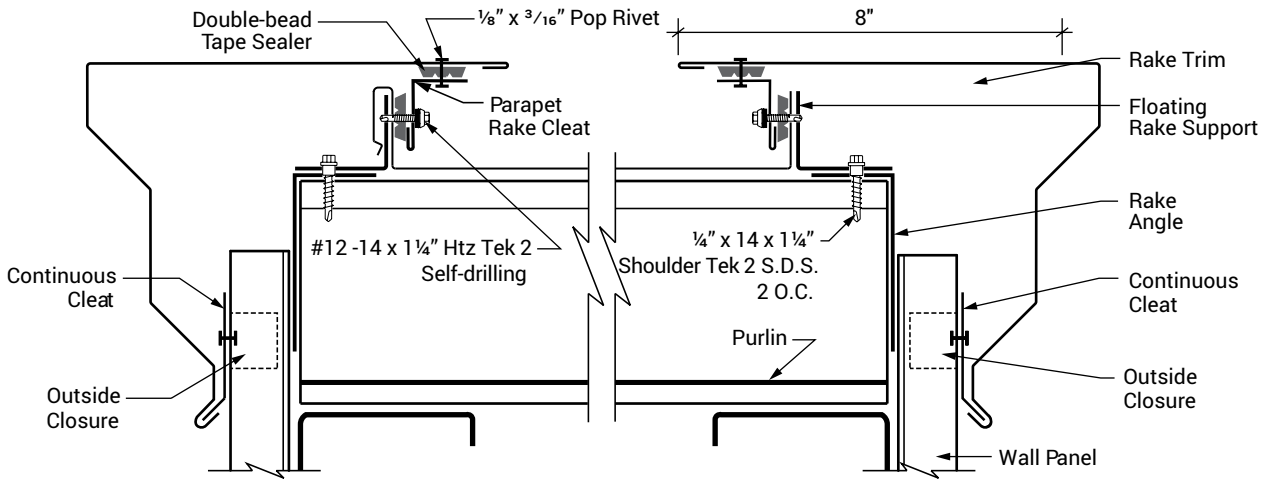

BEGINNING ON MODULE

FINISHING ON MODULE

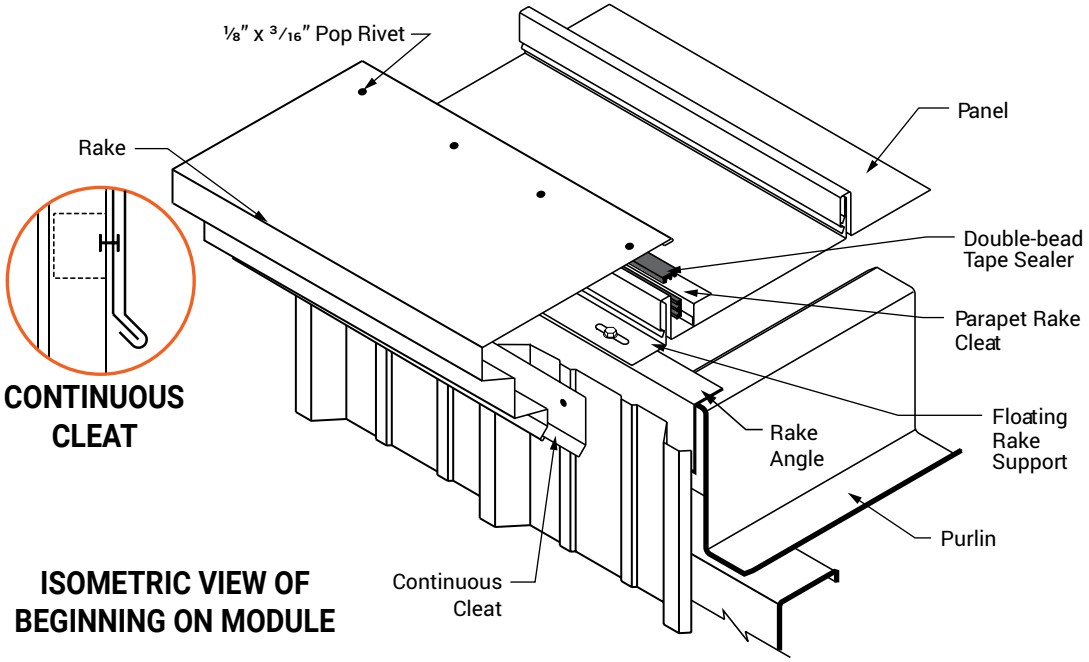

CONTINUOUS CLEAT

ISOMETRIC VIEW OF BEGINNING ON MODULE

NOTES:

1. Using a wall panel other than a 1-1/4" Wall Panel will affect the top dimension of the box rake.
2. Install floating rake support with Fastener ¼" x 14 x 1¼" Shoulder Tek 2 at 2'-0" O.C
3. Engage female leg of panel over rake support.
4. Apply Double-Bead tape sealer to vertical leg of panel. Install parapet rake cleat to panel leg with Fastener #12 -14 x 1¼" Htz Tek 2
5. Self-Drilling at 2'-0" O.C. FASTENERS MUST GO THROUGH RAKE SUPPORT.
6. Apply Double-Bead tape sealer to top of parapet rake cleat and attach rake trim to parapet rake cleat with Fastener ⅛" x 3/16" Pop Rivet at 6" O.C.
7. Use continuous cleat to hold bottom of rake trim in place. Fasten continuous cleat to each high rib of wall panel.
8. If roof finishes on module, finishing detail will be similar to starting detail. If roof finishes off module, field cut and bend last panel run to fit against floating rake support. Install parapet rake cleat, tape sealer and rake trim as previously described.

TYPICAL DETAILS
FIXED RAKE

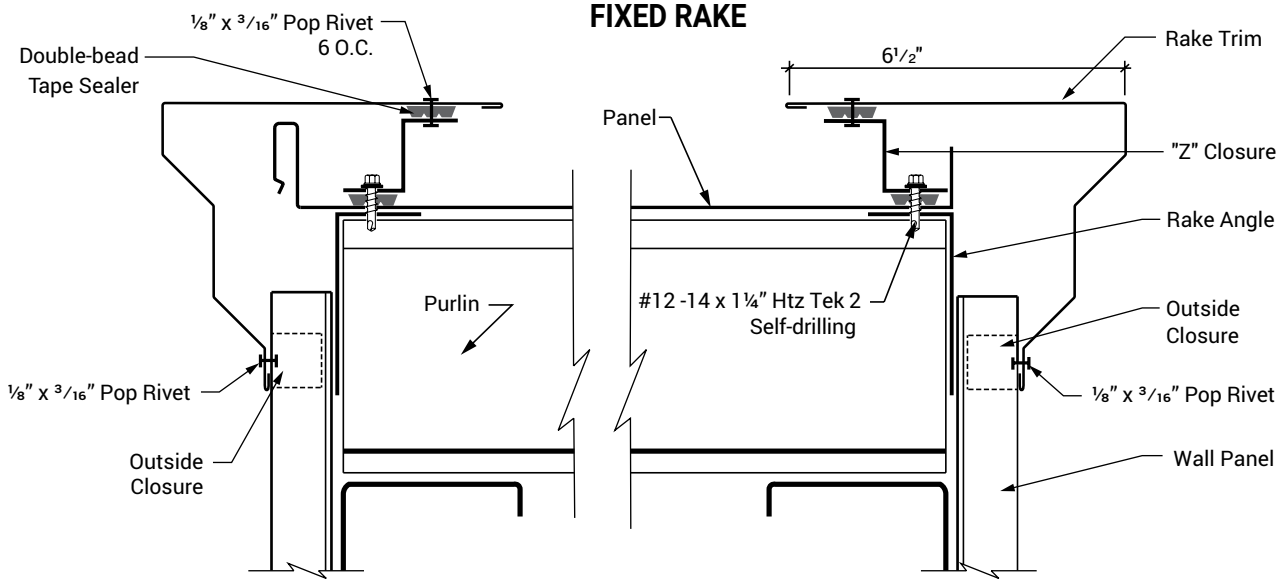

BEGINNING ON MODULE

FINISHING OFF MODULE

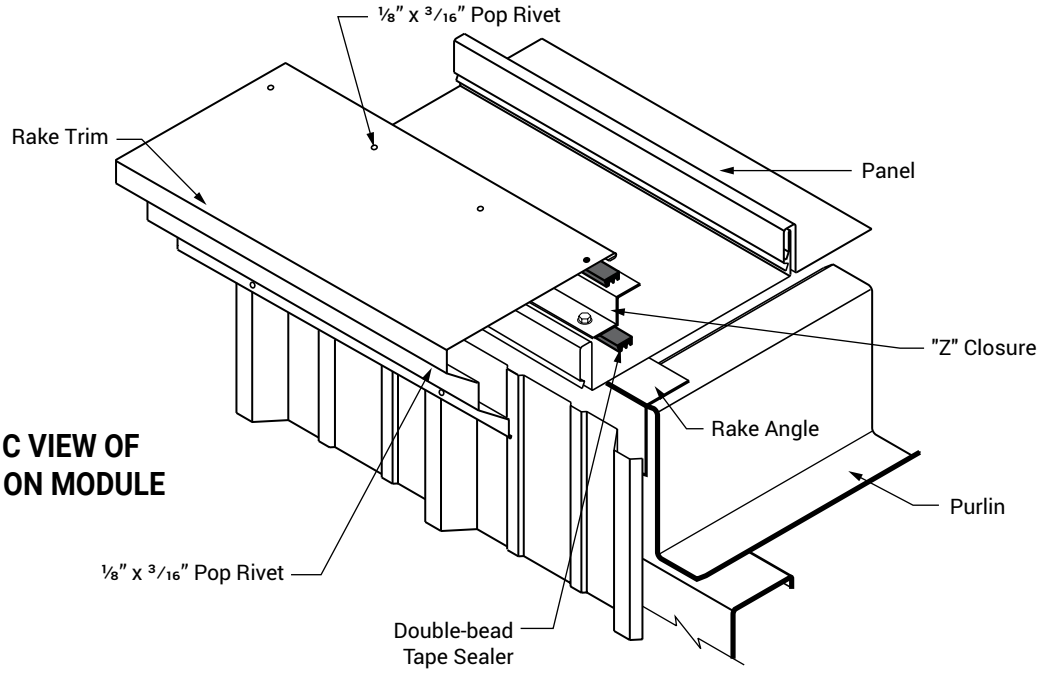

ISOMETRIC VIEW OF BEGINNING ON MODULE

NOTES:

1. Do not use this detail on panel lengths over 20'-0".
2. Using a wall panel other than a 1-1/4" Super Span Panel will affect the top dimension of the rake trim.
3. Install "Z" closure to panel with Fastener #12 -14 x 1¼" Htz Tek 2Self-Drilling at 1'-0" O.C. on top of Double-Bead tape sealer. Apply additional tape sealer to top leg of "Z" closure.
4. Lap all "Z" closures 2". Seal laps with tube caulk.
5. If roof finishes on module, finishing rake detail will be similar to starting detail. If roof finishes off module, field cut and bend panel and install "Z" closure using Fastener #12 -14 x 1¼" Htz Tek 2 Self-Drilling at 1' O.C.
6. Attach rake trim to "Z" closure with Fastener ⅛" x 3/16" Pop Rivet at 6" O.C.

TYPICAL DETAILS
VALLEY

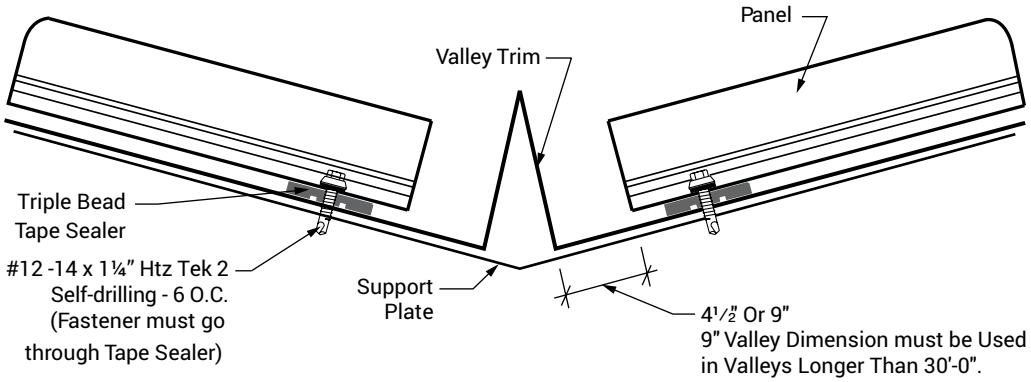

FIXED VALLEY

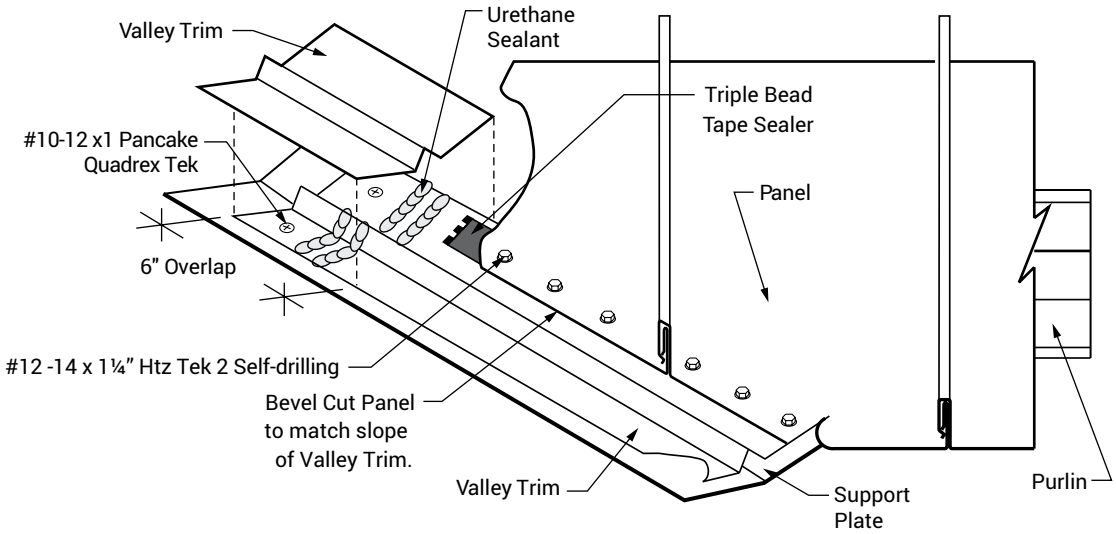

Valley must be designed to support the panels between the purlins.
(ie: Channel, Angle or Plate)

NOTES:

FIXED VALLEY

1. For valleys longer than 30', use extended valley trim.
2. Do not use this detail with the fixed ridge or hip details.
3. Ends of panels should be 4-1/2" minimum from the vertical leg of valley trim.
4. Install Triple Bead tape sealer continuously under panel.
5. Attach panel to support plate with Fastener #12 -14 x 1¼" Htz Tek 2 Self-Drilling at 4" O.C. Fasteners must go through tape sealer under panel.
6. See "Panel End Sealant Detail" on page WS-14 to seal panel ends at valley.

TYPICAL DETAILS
VALLEY

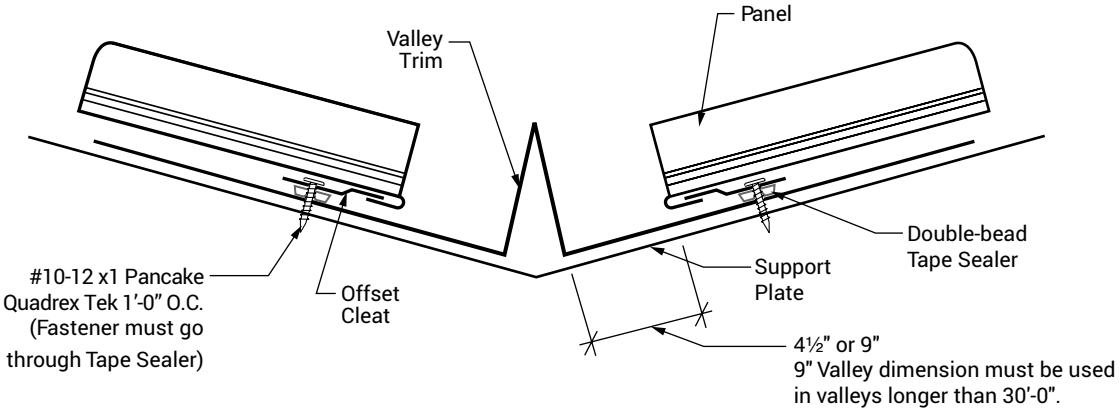

CROSS SECTION OF FLOATING OVER PURLINS

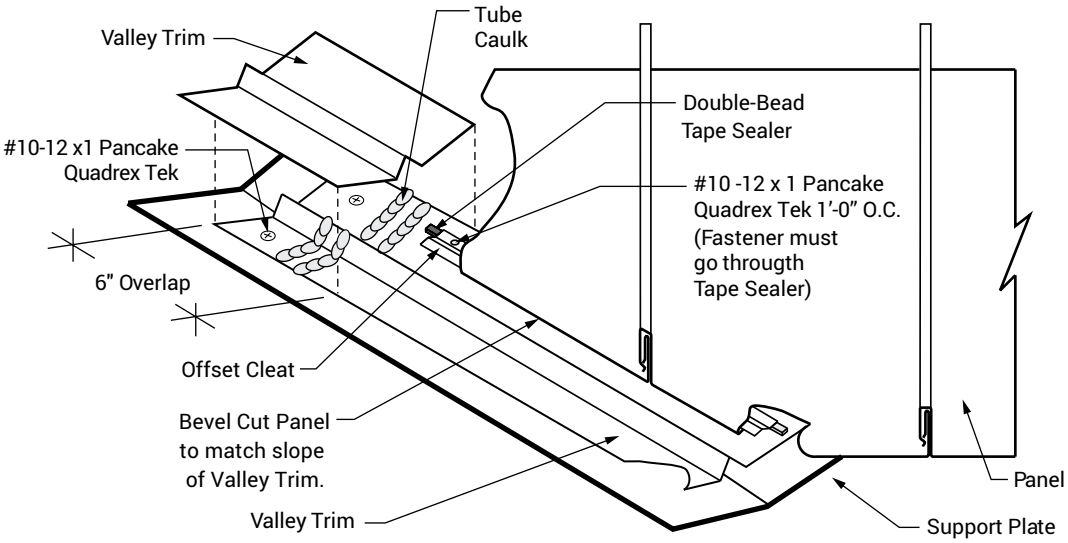

ISOMETRIC VIEW OF VALLEY

NOTES:

VALLEY WITH OFFSET CLEAT

1. For valleys longer than 30', use extended valley trim.
2. Panels must be attached to substructure at the ridge or hip to prevent them from sliding downslope.
3. Offset cleat is installed continuous along slope of valley over Double-Bead tape sealer with Fastener #10-12 x 1 Pancake Quadrex Tek at 1'-0" O.C. Fasteners must go through tape sealer.
4. Clip spacing should not exceed 4'-0" O.C. for 24 gauge panels or 5'-0" O.C. for 22 gauge panels.
5. Add 1-1/2" to panel length for the panel hem.
6. See "Panel End Sealant Detail" on page WS-15 to seal panel ends at valley.

TYPICAL DETAILS
FIELD HEMMING PANEL END

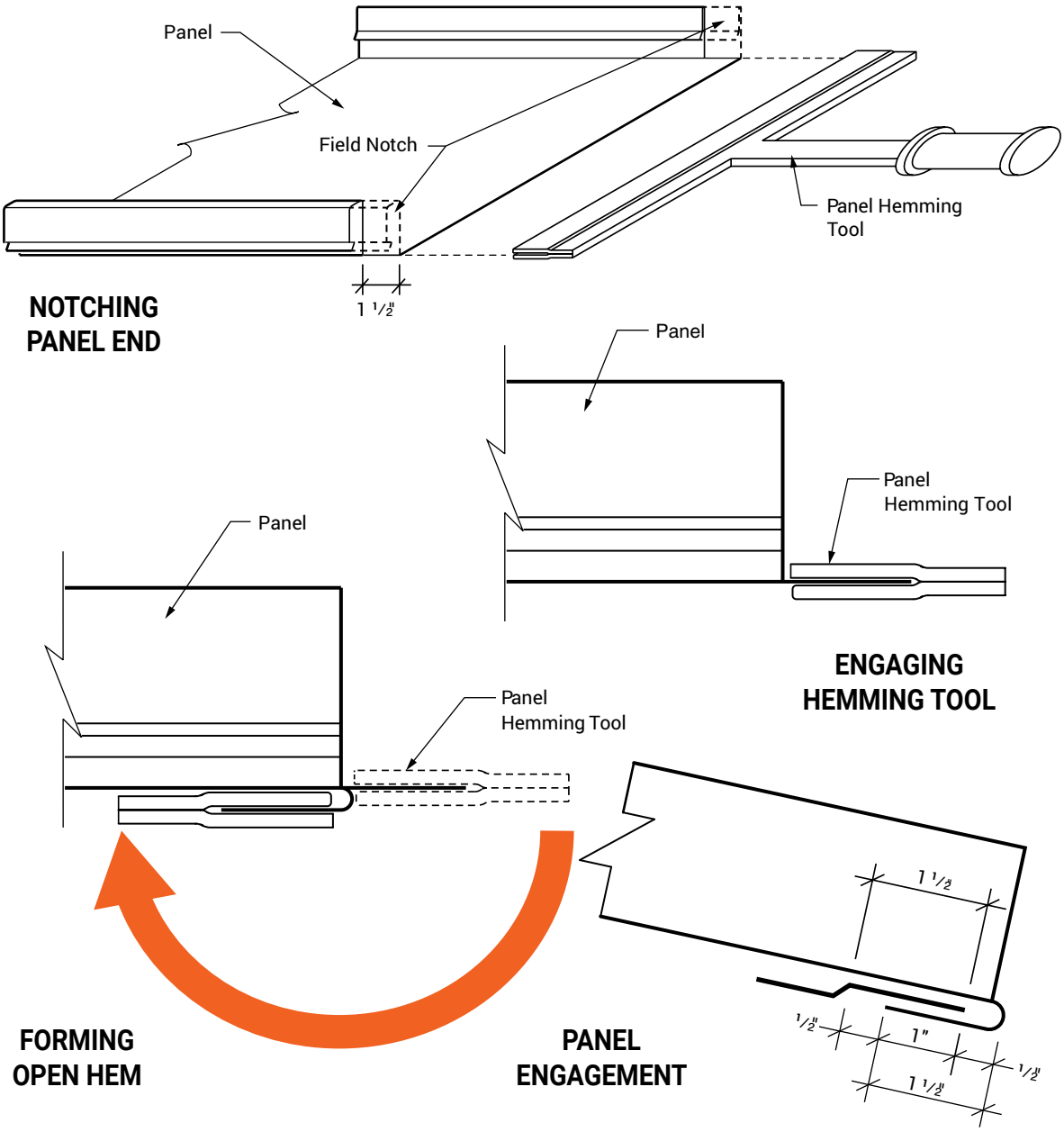

NOTES:

1. Field notch male and female legs of panel 1-1/2".
2. Engage panel hemming tool onto protruding panel.
3. Bend panel down to form an open hem.
4. Hem may be tightened with a pair of vise grip "duck bills."
5. Panel engagement shown above is for panel runs up to 100' long. For panel runs over 100' long, please call Whirlwind.

TYPICAL DETAILS
GUTTER

CROSS SECTION OF GUTTER WITH OFFSET CLEAT

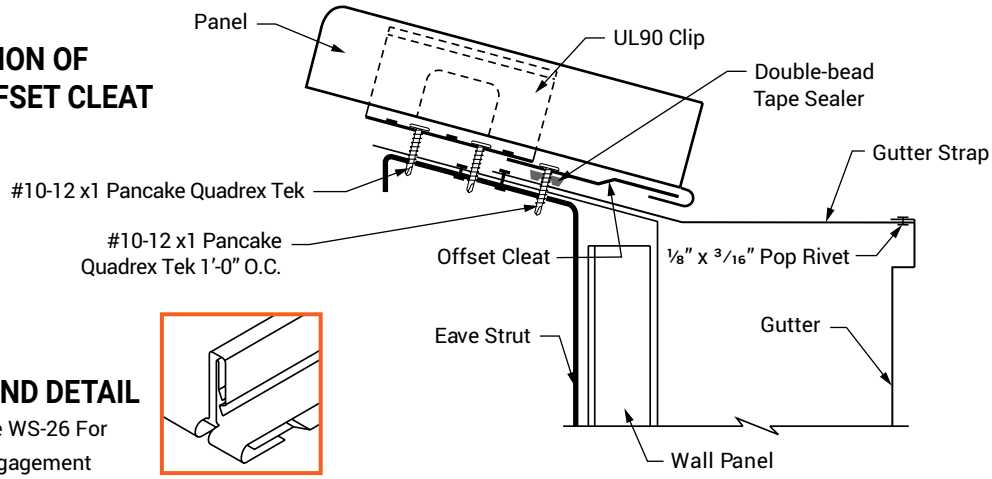

PANEL END DETAIL

See Page WS-26 For Panel Engagement

CROSS SECTION OF GUTTER WITH DRIP EDGE

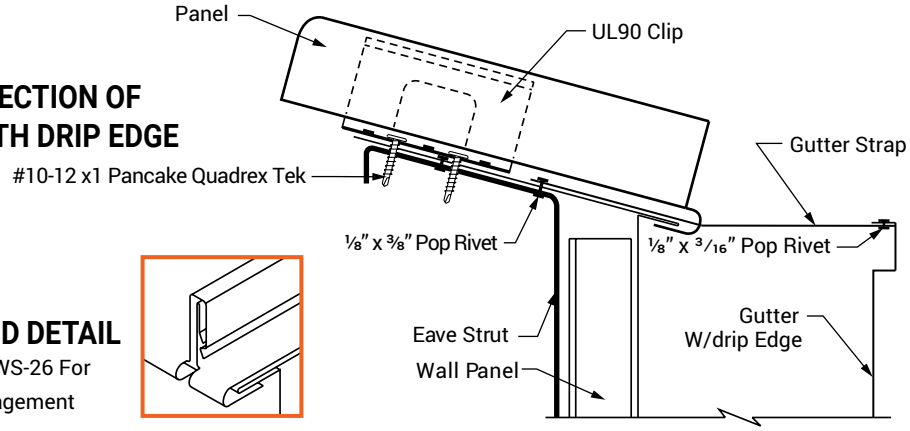

PANEL END DETAIL

See Page WS-26 For Panel Engagement

NOTES:

OFFSET CLEAT

1. The offset cleat method of attachment should be used when ridge, high side eave or endlap is fixed to the substructure. Panels must be attached at one of these points to prevent them from sliding downslope.
2. Attach offset cleat to eave strut with Fastener #10-12 x 1 Pancake Quadrex Tek at 1'-0" O.C,
3. To field hem panel, see page WS-27.
4. See "Panel End Sealant Detail" on page WS-14 to seal panel ends.

GUTTER WITH DRIP EDGE

1. The gutter with drip edge method of attachment should be used when ridge, high side eave or endlap is fixed to the substructure. Panels must be attached at one of these points to prevent them from sliding downslope.
2. Install gutter to eave strut with Fastener ⅛" x ⅜" Pop Rivet at 2'-0" O.C.
3. Attach gutter straps to gutter with Fastener ⅛" x 3/16" Pop Rivet at 3'-0" O.C.
4. To field hem panel, see page WS-27.
5. Notch panel hem for gutter strap.
6. See "Panel End Sealant Detail" on page WS-15 to seal panel ends.
7. This detail may be used on roofs with pitches of 4:12 or less. For roofs with pitches greater than 4:12, call Whirlwind.

TYPICAL DETAILS
EAVE TRIM

CROSS SECTION OF EAVE TRIM WITH OFFSET CLEAT

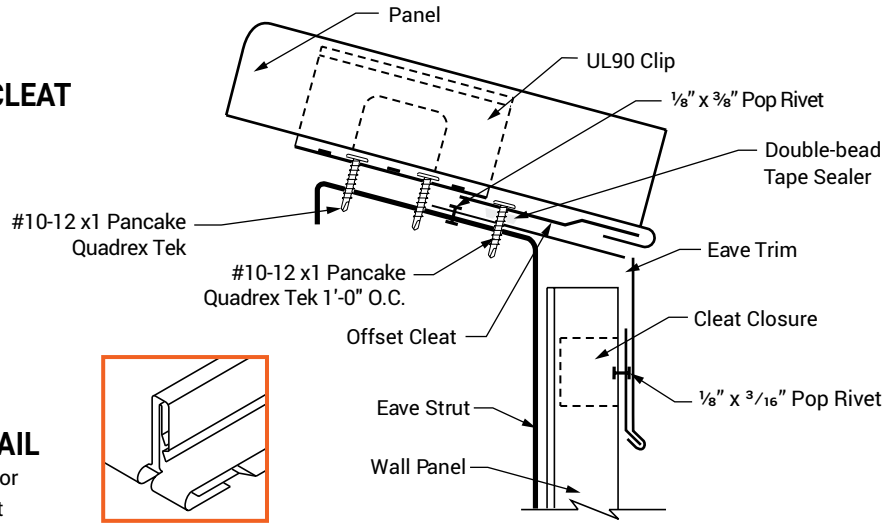

PANEL END DETAIL

See Page WS-26 For Panel Engagement

CROSS SECTION OF EAVE TRIM WITH EXTENDED DRIP EDGE

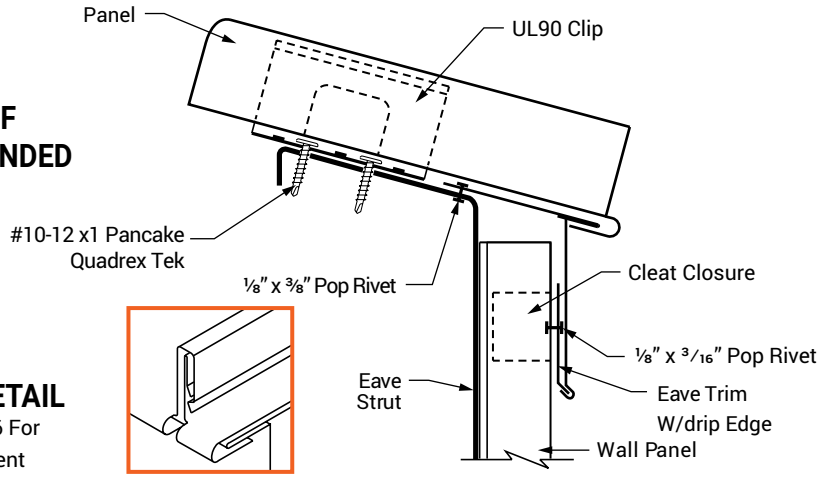

PANEL END DETAIL

See Page WS-26 For Panel Engagement

NOTES:

OFFSET CLEAT

1. The offset cleat method of attachment should be used when ridge, high side eave or endlap is fixed to the substructure. Panels must be attached at one of these points to prevent them from sliding downslope.
2. Attach offset cleat to eave strut with Fastener #10-12 x 1 Pancake Quadrex Tek at 1'-0" O.C.
3. To field hem panel, see page WS-27.
4. See "Panel End Sealant Detail" on page WS-14 to seal panel ends.

EAVE WITH EXTENDED DRIP EDGE

1. The eave with extended drip edge method of attachment should be used when ridge, high side eave or endlap is fixed to the substructure. Panels must be attached at one of these points to prevent them from sliding downslope.
2. Attach eave trim to eave strut with Fastener ⅛" x ⅜" Pop Rivet at 2'-0" O.C.
3. To field hem panel, see page WS-27.
4. See "Panel End Sealant Detail" on page WS-15.
5. This detail may be used on roofs with pitches of 4:12 or less. For roofs with pitches greater than 4:12, call Whirlwind.

PARAPET DETAILS FLOATING RAKE

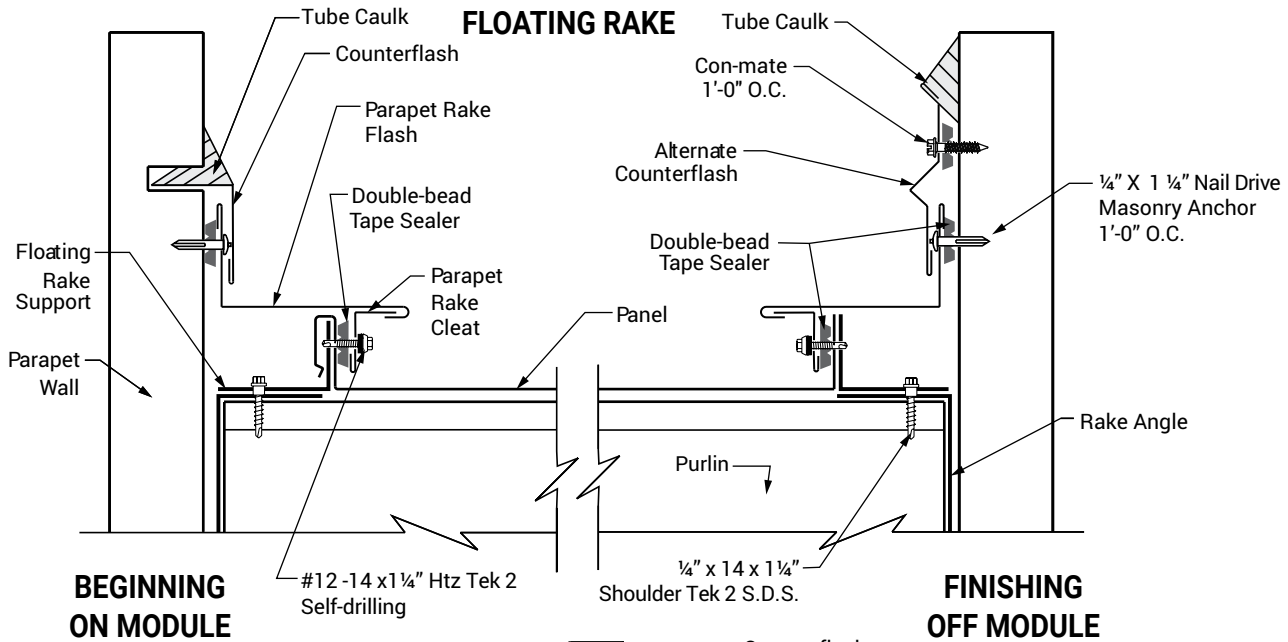

BEGINNING ON MODULE

FINISHING OFF MODULE

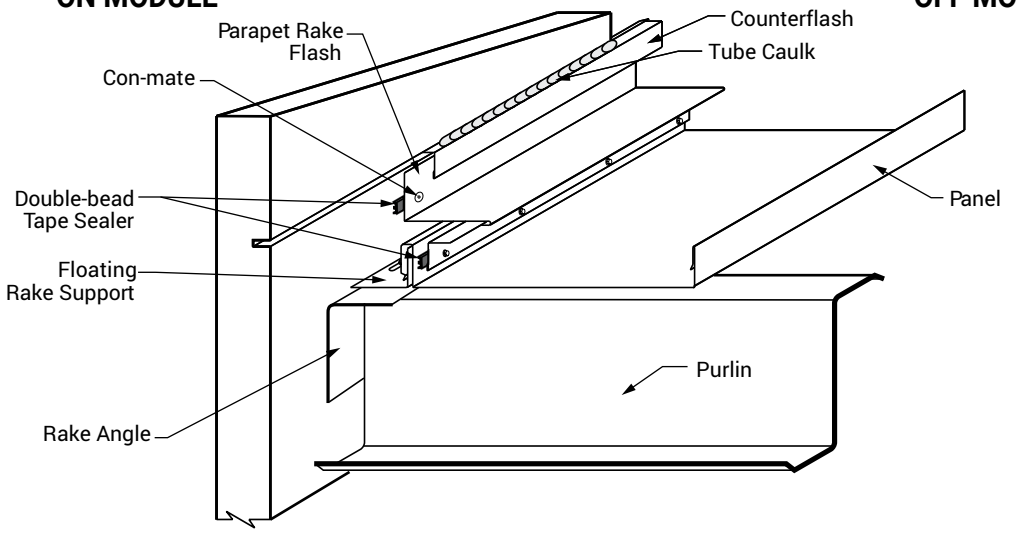

ISOMETRIC VIEW OF STARTING ON MODULE AND SAWCUT DETAIL

NOTES:

1. Install floating rake support with Fastener ¼" x 14 x 1¼" Shoulder Tek 2 Hex Washer Head, No Washer at 2'-0" O.C.
2. Engage female leg of panel over rake support.
3. Apply Double-Bead tape sealer to vertical leg of panel. Install parapet rake cleat to panel leg with Fastener #12 -14 x 1¼" Htz Tek 2 Self-Drilling at 1'-0" O.C. FASTENERS MUST GO THROUGH RAKE SUPPORT.
4. Engage open hem of parapet rake flash onto parapet rake cleat and fasten top leg to parapet wall with Fastener ¼" x 1 ¼" Nail Drive Masonry Anchor.
5. If roof finishes on module, finishing detail will be similar to starting detail. If roof finishes off module, field cut and bend last panel run to fit against floating rake support. Install parapet rake cleat, tape sealer, and parapet rake flash as previously described.
6. If parapet rake flash is not to be immediately installed, temporarily fasten panels to rake support to prevent wind damage.

PARAPET DETAILS
FIXED RAKE

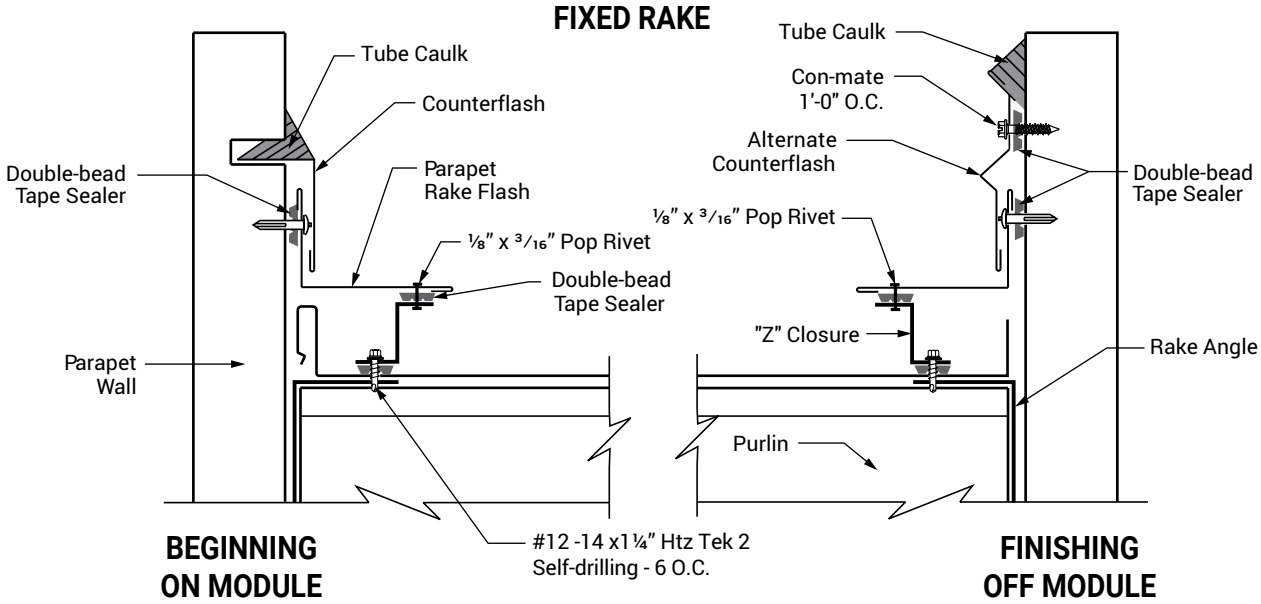

BEGINNING ON MODULE

FINISHING OFF MODULE

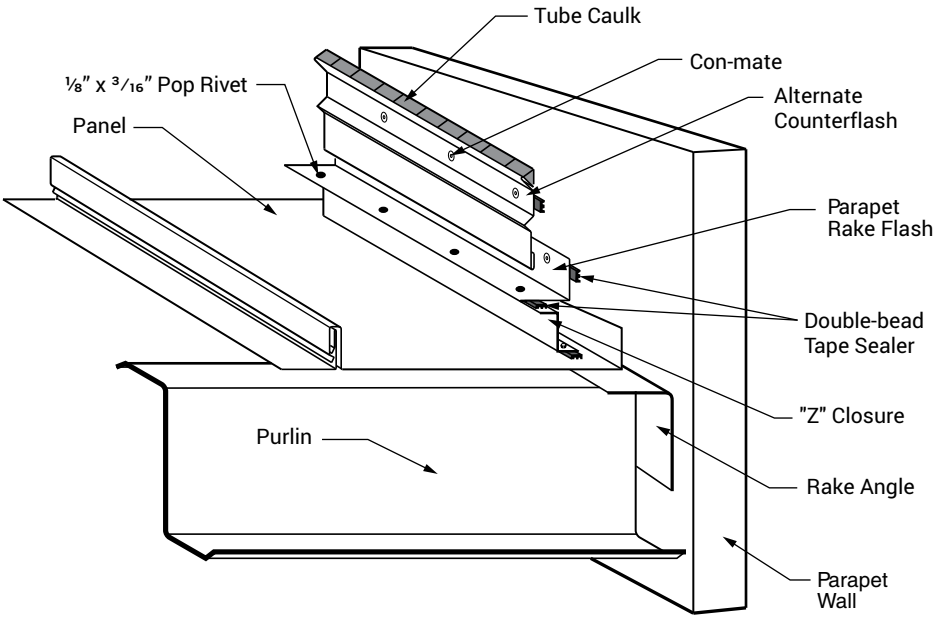

ISOMETRIC VIEW OF FINISHING OFF MODULE AND SURFACE MOUNT DETAIL

NOTES:

1. Do not use this detail on panel lengths over 20'-0".
2. Install "Z" closure to panel with Fastener #12 -14 x 1¼" Htz Tek 2 Self-Drilling at 1'-0" O.C. on top of Double-Bead tape sealer. Apply additional tape sealer to top leg of "Z" closure.
3. Lap all "Z" closures 2". Seal laps with tube caulk.
4. If roof finishes on module, finishing rake detail will be similar to starting detail. If roof finishes off module, field cut and bend panel and install "Z" closure using Fastener #12 -14 x 1¼" Htz Tek 2 Self-Drilling at 6" O.C.
5. Attach parapet rake flash to "Z" closure with Fastener ⅛" x 3/16" Pop Rivet at 6" O.C.
6. Seal counter flash to parapet wall with tube caulk.

PARAPET DETAILS
FLOATING RAKE

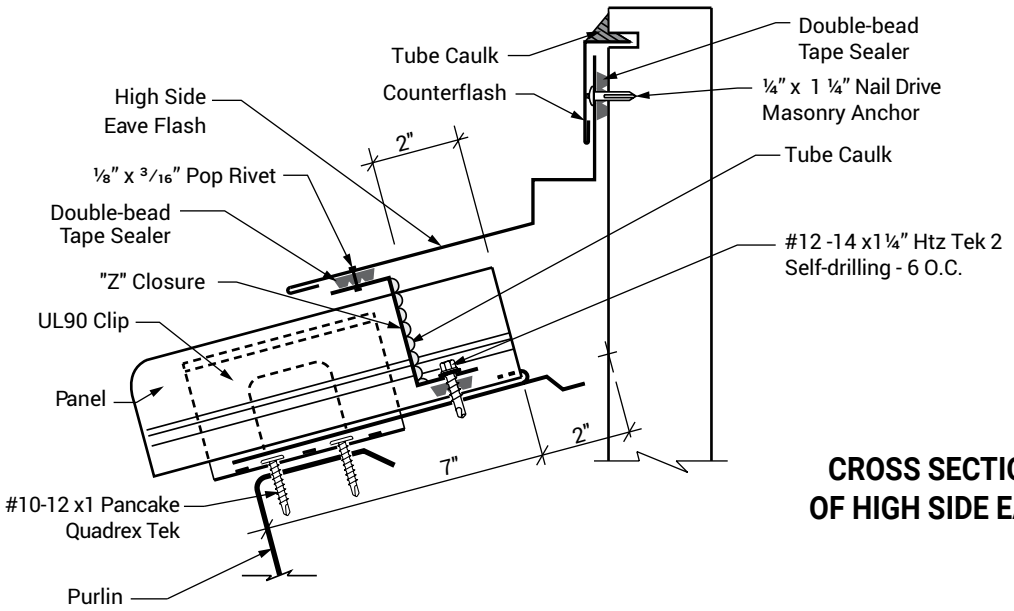

CROSS SECTION OF HIGH SIDE EAVE

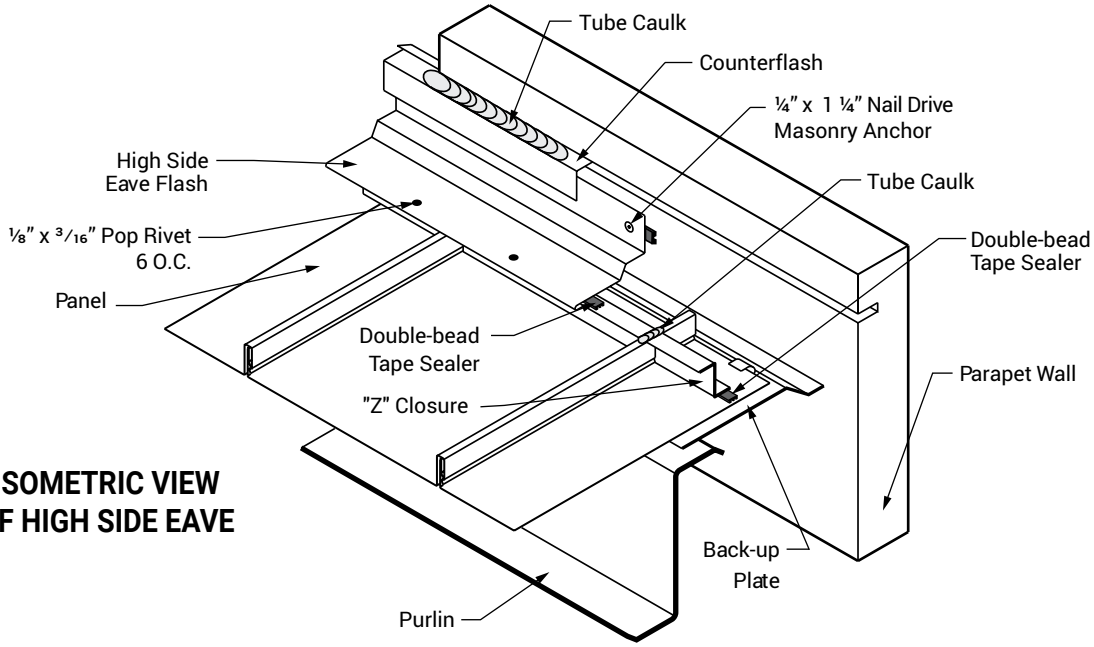

ISOMETRIC VIEW OF HIGH SIDE EAVE

NOTES:

1. Do not use this detail with the offset cleat method of attachment at the eave or valley.
2. Install back-up plate onto end of panel.
3. Field cut "Z" closures to fit panel width.
4. Apply Double-Bead tape sealer to panels. Center of tape sealer should be 1-1/2" from end of panel.
5. Install "Z" closures to panels with Fastener #12 -14 x 1¼" Htz Tek 2 Self-Drilling at 6" O.C. Vertical leg of "Z" closures should be v2" from end of panels.
6. Seal ends of "Z" closures to the panel seams with tube caulk. Apply Double-Bead tape sealer to the top leg of "Z" closures.
7. Attach parapet high side eave trim to "Z" closure with Fastener ⅛" x 3/16" Pop Rivet at 6" O.C.
8. Seal counter flash to parapet wall with tube caulk.

ROOF TRANSITION

CROSS SECTION OF ROOF TRANSITION

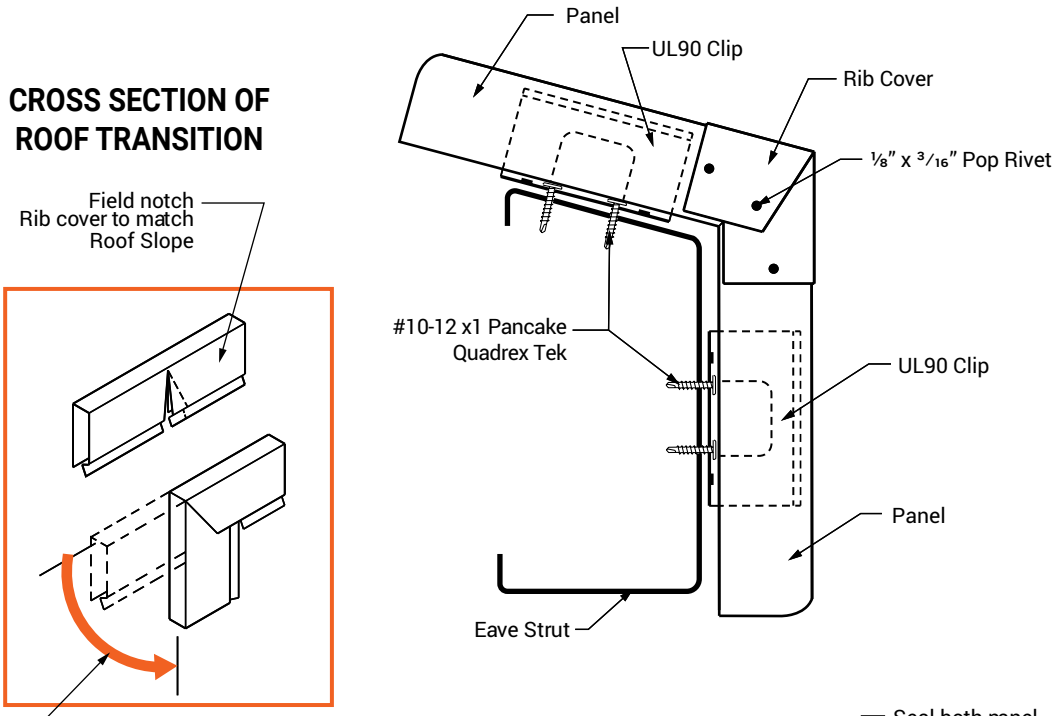

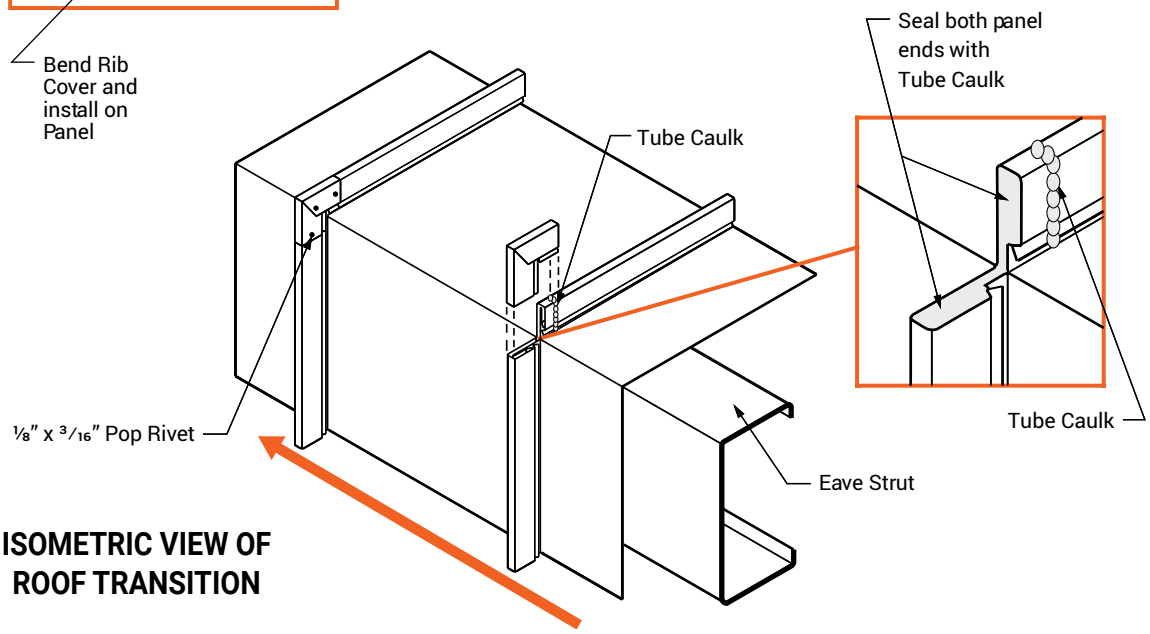

ISOMETRIC VIEW OF ROOF TRANSITION

NOTES:

1. Do not use this detail with the fixed ridge or hip details.
2. Field cut legs of panels and bend to required angle.
3. Fill both exposed ends of panel with tube caulk.
4. Field notch rib cover to allow it to bend to the proper angle.
5. Field apply a bead of tube caulk over rib before applying rib cover.
6. Do not use this detail inside the building envelope.

DETAILS OVER WOOD DECK ENDLAP

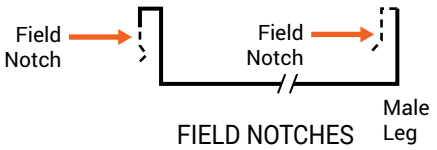

FIELD NOTCHES

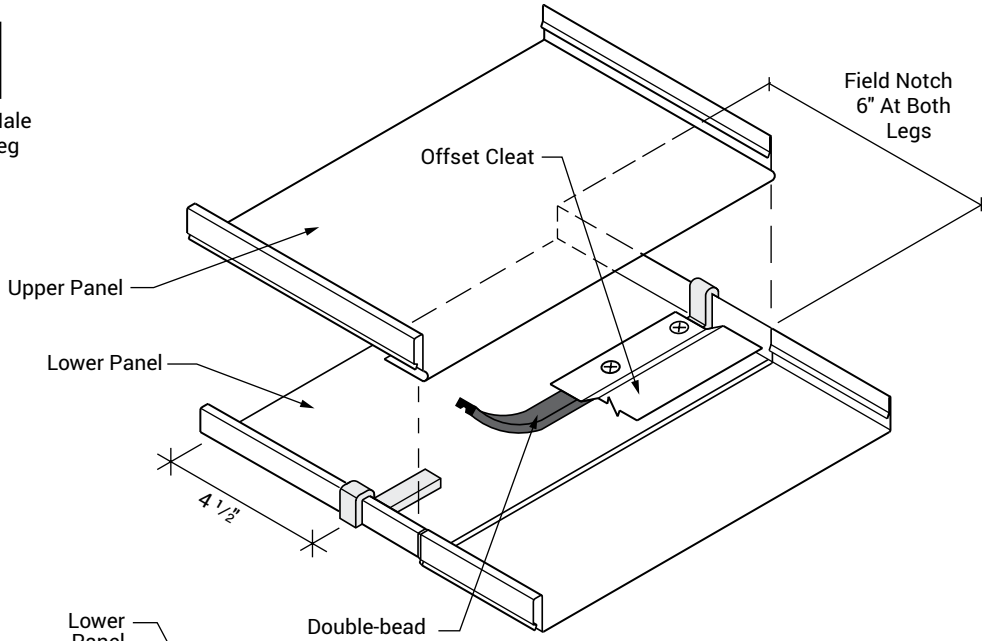

ENDLAP INSTALLATION SEQUENCE

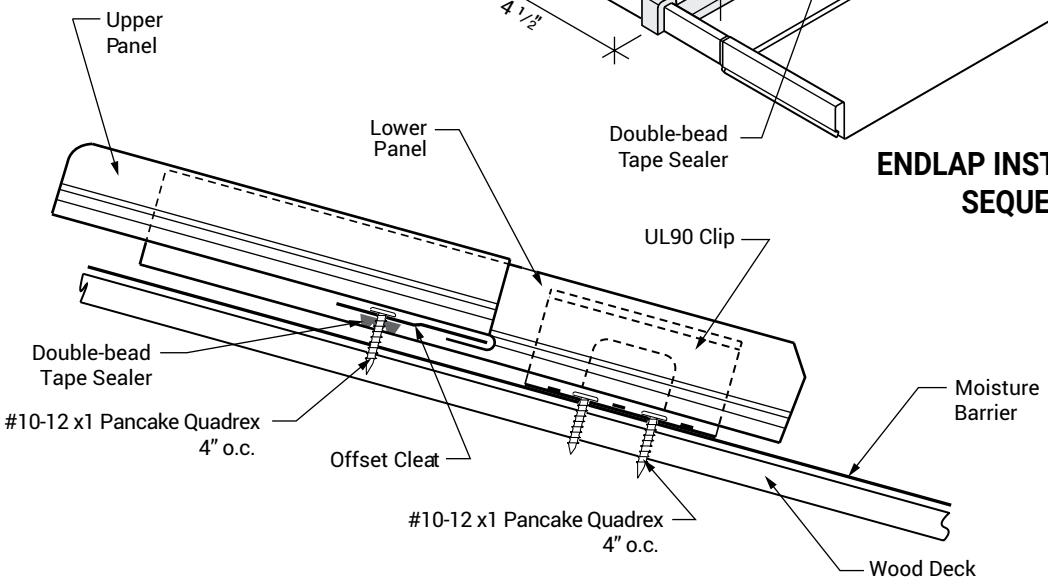

CROSS SECTION ENDLAP OVERWOOD DECK

NOTES:

1. The above endlap detail must be used with the offset cleat method of attachment at the eave or valley. The fixed detail must be used at the ridge or hip. Order the upper endlap panel 1-1/2" longer than normal for the panel hem. See Page WS-9 for ordering information.
2. The bottom panel must have the first 6" of both legs on the upslope end field notched as shown.
3. Install bottom panel so that eave has proper overhang (refer to Eave Details).
4. At upslope end of bottom panel, place Double-Bead tape sealer over entire width of panel. Center of tape sealer should be 4-1/2" from end of panel.
5. Install offset cleat across width of panel (over tape sealer) with Fastener #10-12 x 1 Pancake Quadrex at 4" O.C.
6. Fasteners must go through tape sealer.
7. Field notch male and female legs of panel 1-1/2" and bend panel to form an open hem.
8. Clip spacing should not exceed 4'-0" o.c. for 24 gauge panels or 5'-0" O.C. for 22 gauge panels.

DETAILS OVER WOOD DECK
FIXED RIDGE

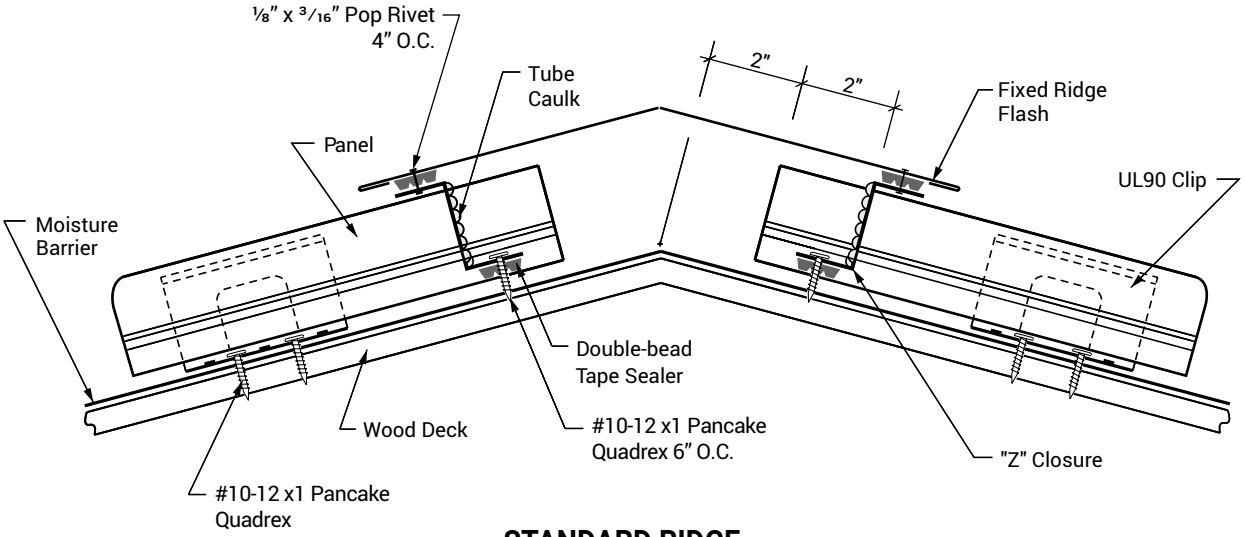

STANDARD RIDGE
OVERWOOD DECK

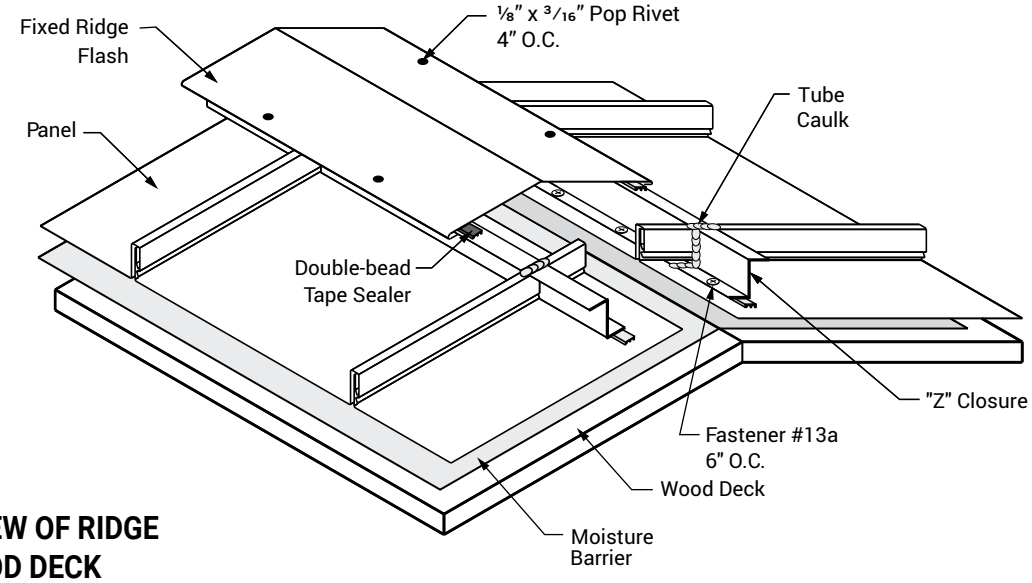

ISOMETRIC VIEW OF RIDGE
OVER WOOD DECK

NOTES:

1. Do not use this detail with the fixed eave or valley details.
2. Field cut "Z" closures to fit panel width.
3. Install Double-Bead tape sealer to panels. Center of tape sealer should be 1" from end of panel.
4. Install "Z" closures to panels with Fastener #10-12 x 1 Pancake Quadrex at 6" O.C. Vertical leg of "Z" closure should be 2" from end of panel. Fasteners must go through tape sealer.
5. Seal end of "Z" closure to panel seams with tube caulk.
6. Clip spacing should not exceed 4'-0" O.C. for 24 gauge panels or 5'-0" O.C. for 22 gauge panels.

DETAILS OVER WOOD DECK
VENTED RIDGE

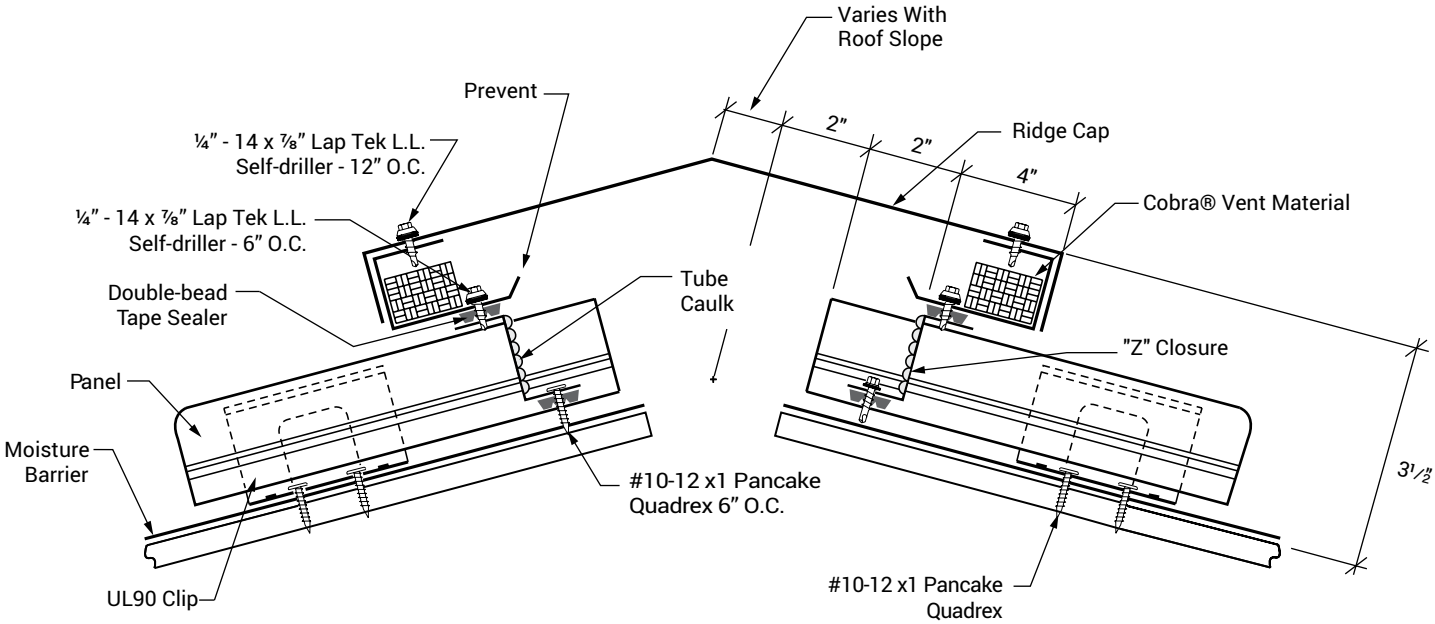

STANDARD RIDGE WITH
PREVENT RIDGE VENT

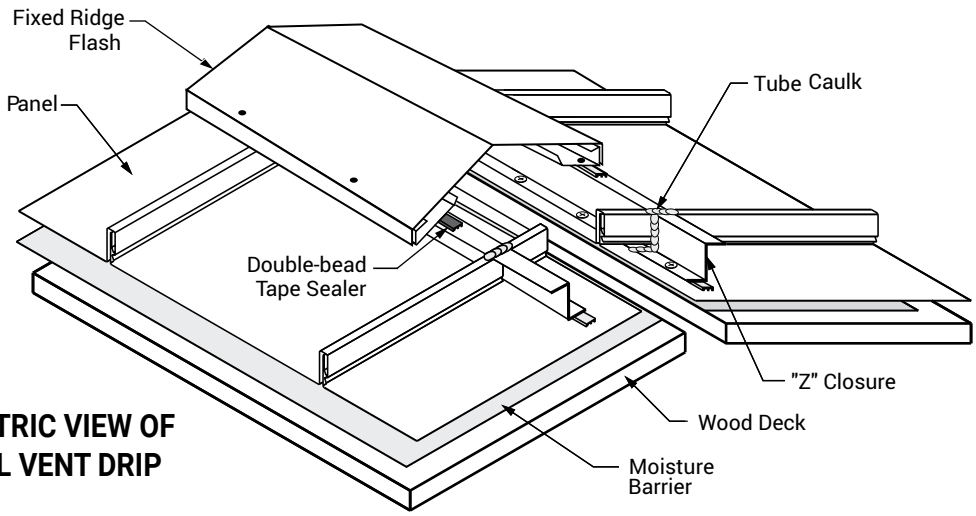

ISOMETRIC VIEW OF
METAL VENT DRIP

NOTES:

1. Do not use this detail with the fixed eave or valley details.
2. Field cut "Z" closures to fit panel width.
3. Install Double-Bead tape sealer to panels. Center of tape sealer should be 1" from end of panel.
4. Install "Z" closures to panels with Fastener #10-12 x 1 Pancake Quadrex at 6" O.C. Vertical leg of "Z" closure should be 2" from end of panel. Fasteners must go through tape sealer.
5. Seal end of "Z" closure to panel seams with tube caulk.
6. Clip spacing should not exceed 4'-0" O.C. for 24 gauge panels or 5'-0" O.C. for 22 gauge panels.
7. Install vented metal to outside closures with Fastener #12 -14 x 1¼" Htz Tek 2 Self-Drilling at 2'-0" O.C.
8. Attach ridge flash with Fastener ¼" - 14 x ⅞" Lap Tek Long Life Self-Driller at 1'-0" O.C. to vented metal.
9. Ridge cap width will vary depending on the roof slope. Refer to section above for calculating the correct width.

DETAILS OVER WOOD DECK
VENTED RIDGE

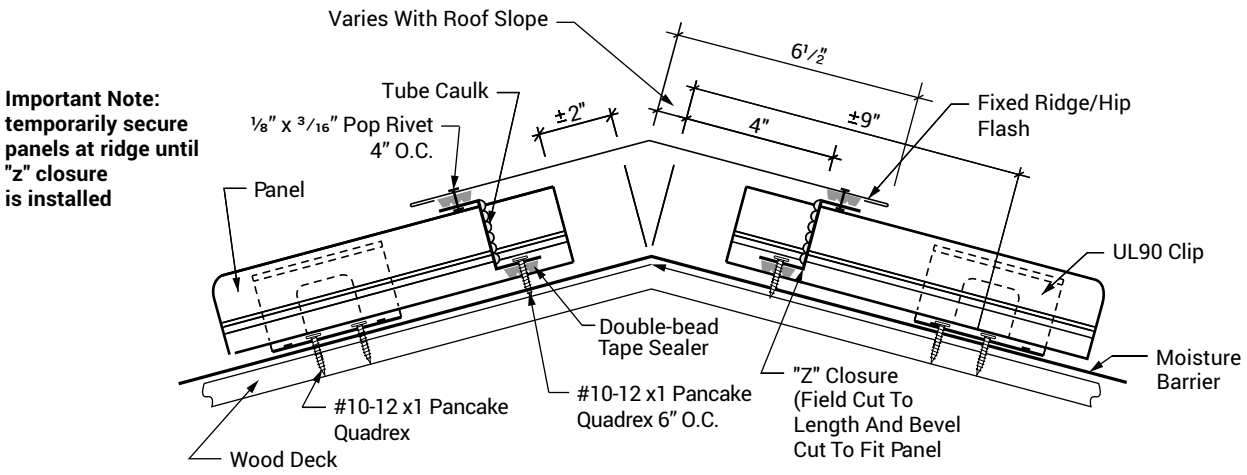

STANDARD FIXED HIP
OVER WOOD DECK

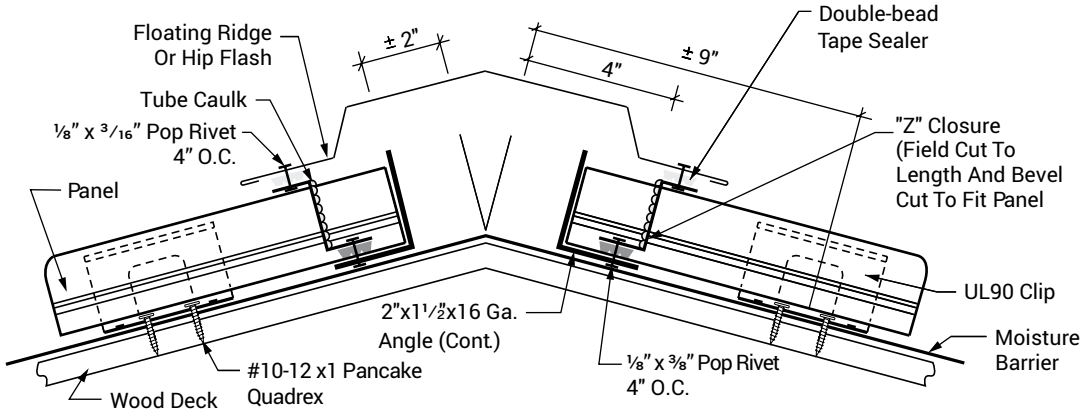

STANDARD FLOATING RIDGE/HIP
OVER WOOD DECK

NOTES:

FIXED HIP

1. Do not use this detail with the fixed eave or valley details.
2. Bevel cut and install panels to follow slope of hip.
3. Install Double-Bead tape sealer to panels, running parallel to the hip. Center of tape sealer should be 3-1/2"from the center of the hip.
4. Install "Z" closures to panels with Fastener #10-12 x 1 Pancake Quadrex at 6" O.C. Vertical leg of "Z" closure should be 4" from center of hip.

FLOATING RIDGE/HIP

1. Do not use this detail with the offset cleat method of attachment at the eave or valley.
2. Field cut "Z" closures to fit panel width.
3. Install Double-Bead tape sealer to panels. Center of tape sealer should be 1-1/2" from end of panel.
4. Slide a length of 2" x 1-1/2" x 16 gauge angle under the panels.
5. Install "Z" closures to panels and 2" x 1-1/2" angle with Fastener ⅛" x ⅜" Pop Rivet at 4" O.C. Vertical leg of "Z" closure should be 4" from center of ridge. Seal sides of "Z" closures to panel seams with tube caulk.

DETAILS OVER WOOD DECK
FIXED PEAK

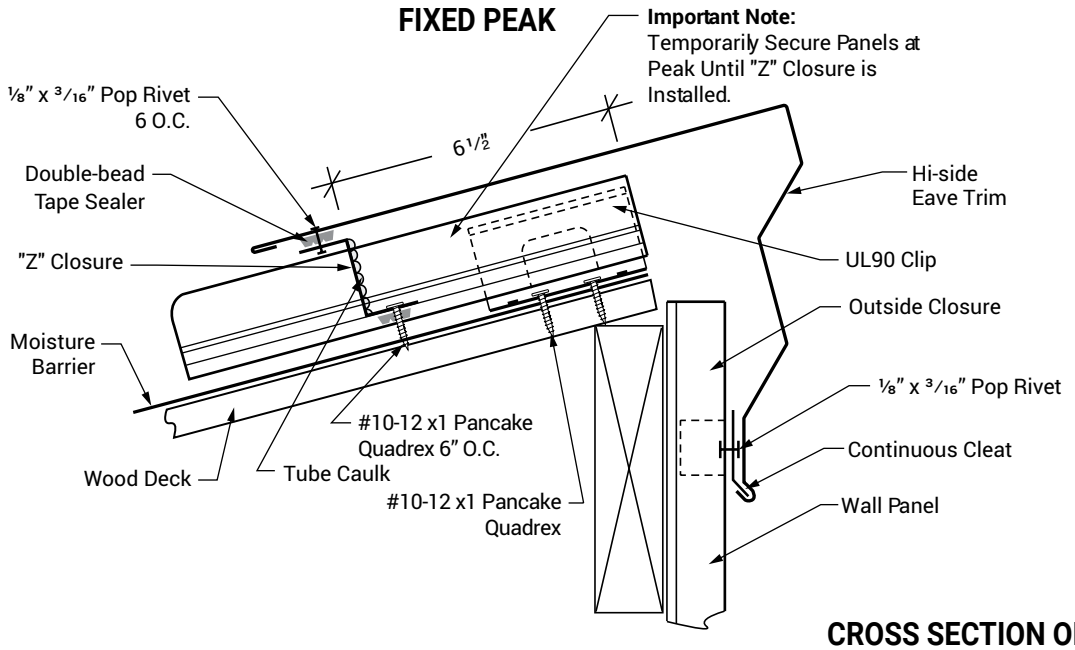

CROSS SECTION OF PEAK

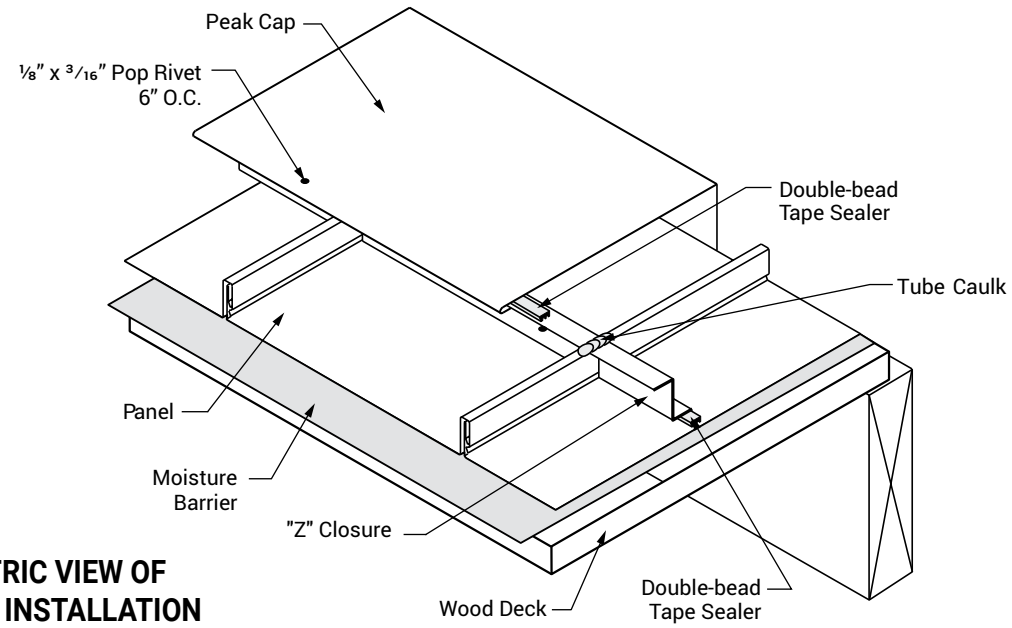

ISOMETRIC VIEW OF PEAK CAP INSTALLATION

NOTES:

1. Do not use this detail with fixed eave or valley details.
2. Field cut "Z" closures to fit panel width.
3. Apply Double-Bead tape sealer to panels. The center of tape sealer should be 6" from the end of the panel.
4. Install "Z" closures to panels with Fastener #10-12 x 1 Pancake Quadrex at 6" O.C. Vertical leg of "Z" closure should be 6-1/2" from end of panel.
5. Seal ends of "Z" closures to panel seams with tube caulk. Install Double-Bead tape sealer to top leg of "Z" closure.
6. Attach peak cap to "Z" closure with Fastener ⅛" x 3/16" Pop Rivet at 6" O.C.

DETAILS OVER WOOD DECK GUTTER

CROSS SECTION OF GUTTER WITH OFFSET CLEAT

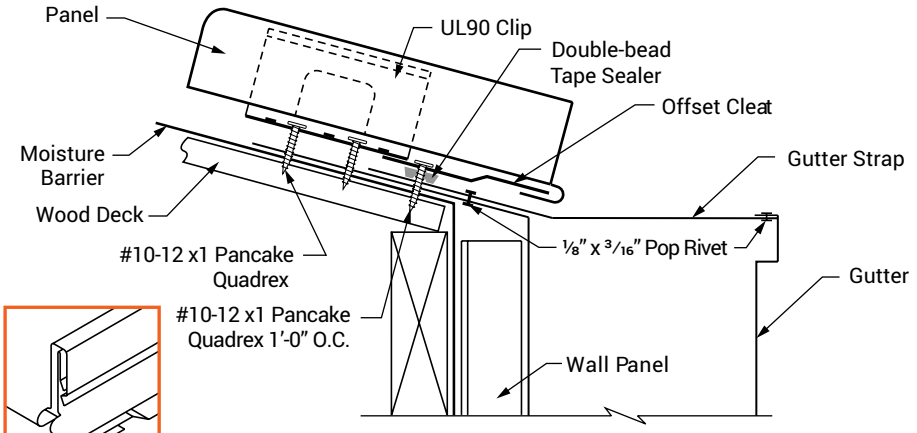

PANEL END DETAIL

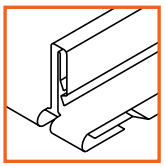

See Page WS-26 For Panel Engagement

CROSS SECTION OF GUTTER WITH DRIP EDGE

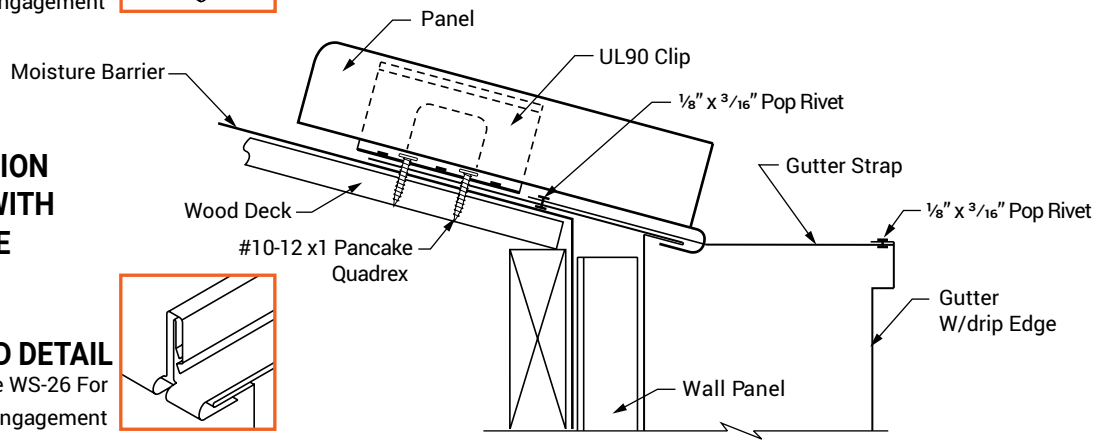

PANEL END DETAIL

See Page WS-26 For Panel Engagement

NOTES:

OFFSET CLEAT

1. The offset cleat method of attachment should be used when ridge, peak or endlap is fixed to the substructure. Panels must be attached at one of these points to prevent them from sliding downslope.
2. Attach offset cleat to wood deck with Fastener #10-12 x 1 Pancake Quadrex at 1'-0" O.C.
3. To field hem panel, see page WS-26.
4. See "Panel End Sealant Detail" on page WS-15 to seal panel ends.

GUTTER WITH DRIP EDGE

1. The gutter with drip edge method of attachment should be used when ridge, peak or endlap is fixed to the substructure. Panels must be attached at one of these points to prevent them from sliding downslope.
2. Install gutter to wood deck with Fastener #10-12 x 1 Pancake Quadrex at 2'-0" O.C.
3. Attach gutter straps to gutter with Fastener ⅛" x 3/16" Pop Rivet at 3'-0" O.C.
4. To field hem panel, see page WS-26.
5. Notch panel hem for gutter strap.
6. See "Panel End Sealant Detail" on page WS-14 to seal panel ends.
7. This detail may be used on roofs with pitches of 4:12 or less. For roofs with pitches greater than 4:12, call Whirlwind.

DETAILS OVER WOOD DECK
FLOATING RAKE

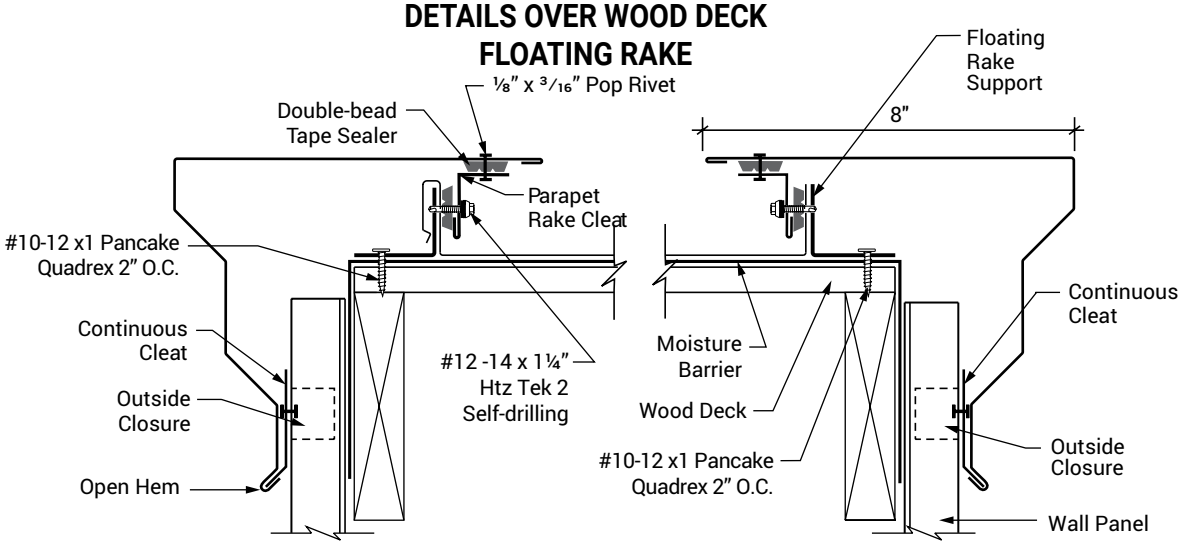

BEGINNING ON MODULE

FINISHING OFF MODULE

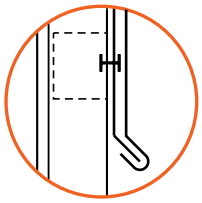

CONTINUOUS CLEAT

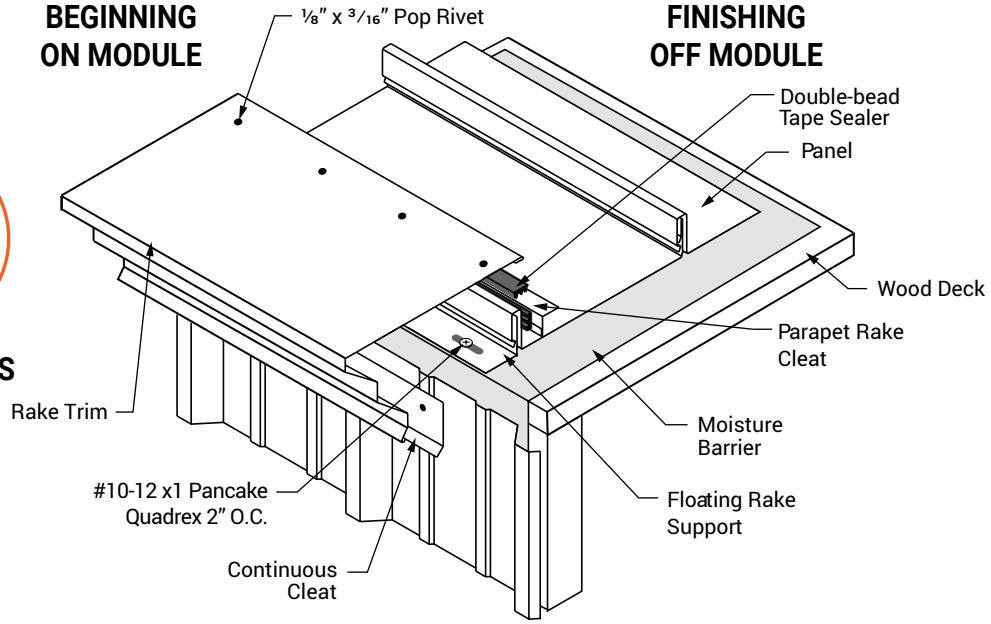

ISOMETRIC VIEW OF BEGINNING ON MODULE

NOTES:

1. Using a wall panel other than a 1-1/4" Super Span Panel will affect the top dimension of the box rake.
2. Install floating rake support with Fastener #10-12 x 1 Pancake Quadrex at 2'-0" O.C. (Install Fastener #10-12 x 1 Pancake Quadrex so as not to restrict the movement of the rake support).
3. Engage female leg of panel over rake support.
4. Apply Double-Bead tape sealer to vertical leg of panel. Install parapet rake cleat to panel leg with Fastener #12 -14 x 1¼" Htz Tek 2 Self-Drilling at 2'-0" O.C. FASTENERS MUST GO THROUGH RAKE SUPPORT.
5. Apply Double-Bead tape sealer to top of parapet rake cleat and attach rake trim to parapet rake cleat with Fastener ⅛" x 3/16" Pop Rivet at 6" O.C.
6. Use continuous cleat to hold bottom of rake trim in place. Fasten continuous cleat to each high rib of wall panel. The bottom hem of the rake trim is "open".
7. If roof finishes on module, finishing detail will be similar to starting detail. If roof finishes off module, field cut and bend last panel run to fit against floating rake support. Install parapet rake cleat, tape sealer and rake trim as previously described.
8. If rake trim is not to be immediately installed, temporarily fasten panels to rake support to prevent wind damage.
9. The top dimension of the rake will be affected by the wall panel thickness.

DETAILS OVER WOOD DECK
VALLEY WITH OFFSET CLEAT

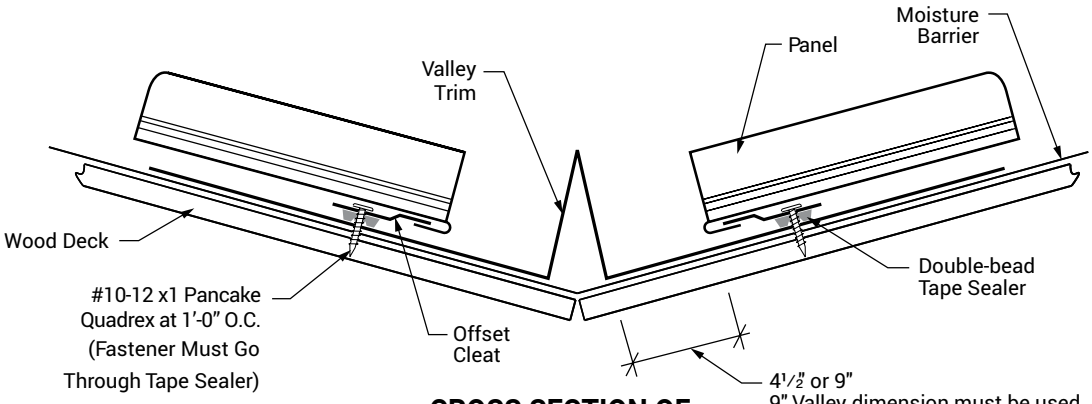

CROSS SECTION OF VALLEY OVER WOOD DECK

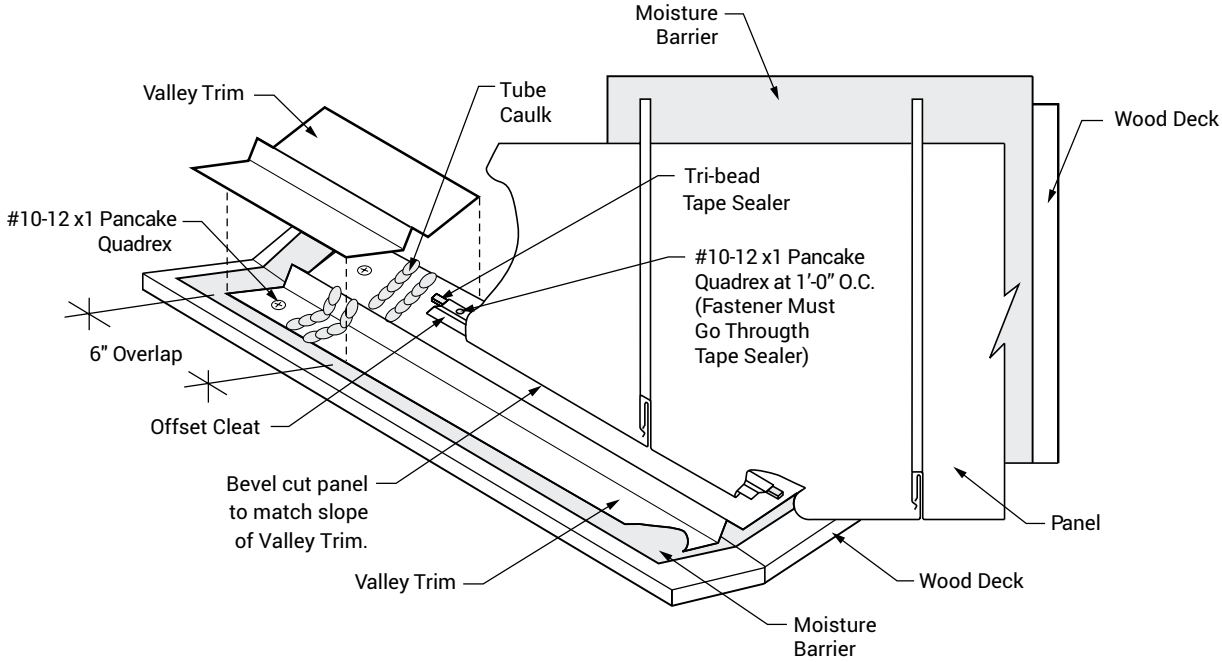

ISOMETRIC VIEW OF VALLEY OVER WOOD DECK

NOTES:

1. For valleys longer than 30', use extended valley trim (see page WS-8).
2. Panels must be attached to substructure at the ridge or hip to prevent them from sliding downslope.
3. Offset cleat is installed continuous along slope of valley over Double-Bead tape sealer with Fastener #10-12 x 1 Pancake Quadrex at 1'-0" O.C. Fasteners must go through tape sealer.
4. Clip spacing should not exceed 4'-0" O.C. for 24 gauge panels or 5'-0" O.C. for 22 gauge panels.
5. Add 1-1/2" to the panel length for panel hem.
6. See "Panel End Sealant Detail" on page WS-14 to seal panel ends at valley.

DETAILS OVER WOOD DECK
PARAPET FLOATING RAKE

SAWCUT DETAIL (RECOMMENDED)

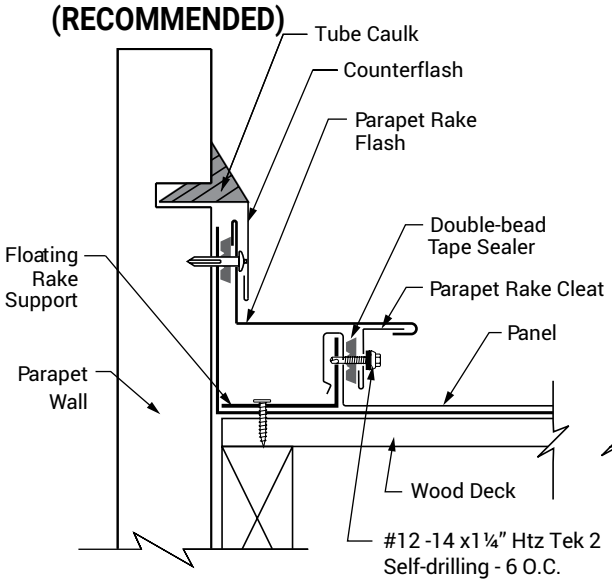

SURFACE MOUNT DETAIL

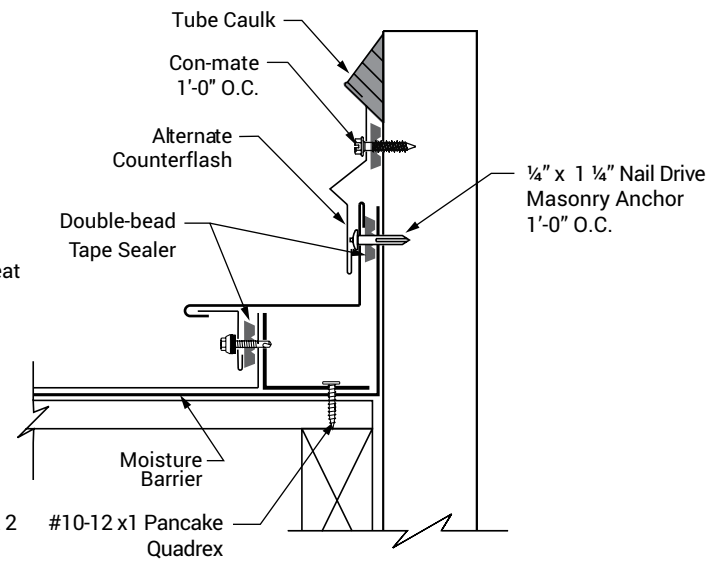

BEGINNING ON MODULE

FINISHING OFF MODULE

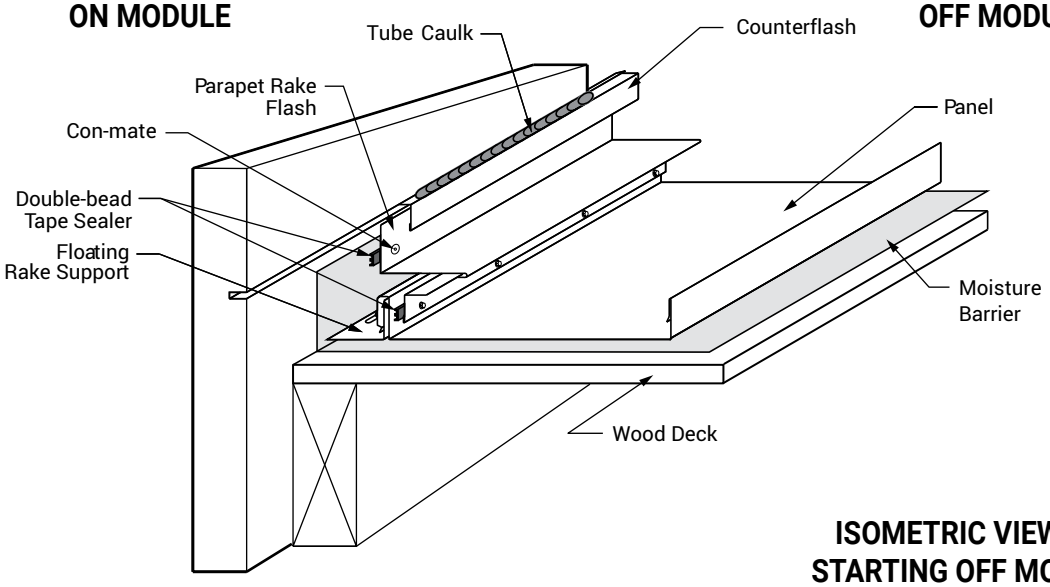

ISOMETRIC VIEW OF STARTING OFF MODULE

NOTES:

1. Install floating rake support with Fastener #10-12 x 1 Pancake Quadrex at 2'-0" O.C. (Install Fastener #10-12 x 1 Pancake Quadrex so as not to restrict the movement of the rake support).
2. Engage female leg of panel over rake support.
3. Apply Double-Bead tape sealer to vertical leg of panel. Install parapet rake cleat to panel leg with Fastener #12 -14 x 1¼" Htz Tek 2 Self-Drilling at 2'-0" O.C. FASTENERS MUST GO THROUGH RAKE SUPPORT.
4. Engage open hem of parapet rake flash onto parapet rake cleat and fasten top leg to parapet wall with Fastener ¼" x 1 ¼" Nail Drive Masonry Anchor.
5. If roof finishes on module, finishing detail will be similar to starting detail. If roof finishes off module, field cut and bend last panel run to fit against floating rake support. Install parapet rake cleat, tape sealer and parapet rake flash as previously described.
6. If parapet rake flash is not to be immediately installed, temporarily fasten panels to rake support to prevent wind damage.

DETAILS OVER WOOD DECK PARAPET HIGH SIDE EAVE

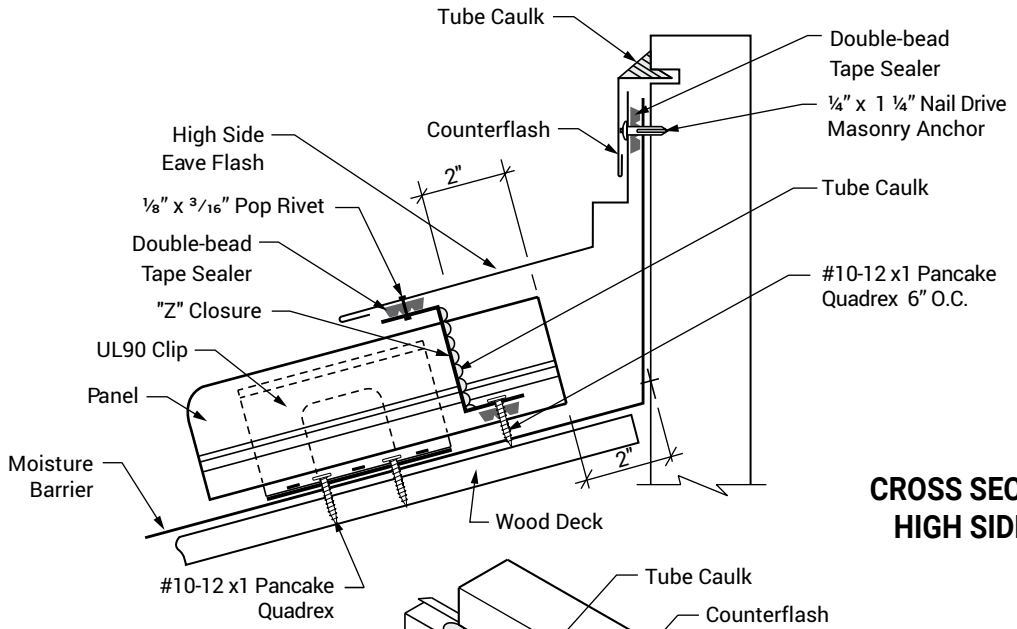

CROSS SECTION OF HIGH SIDE EAVE

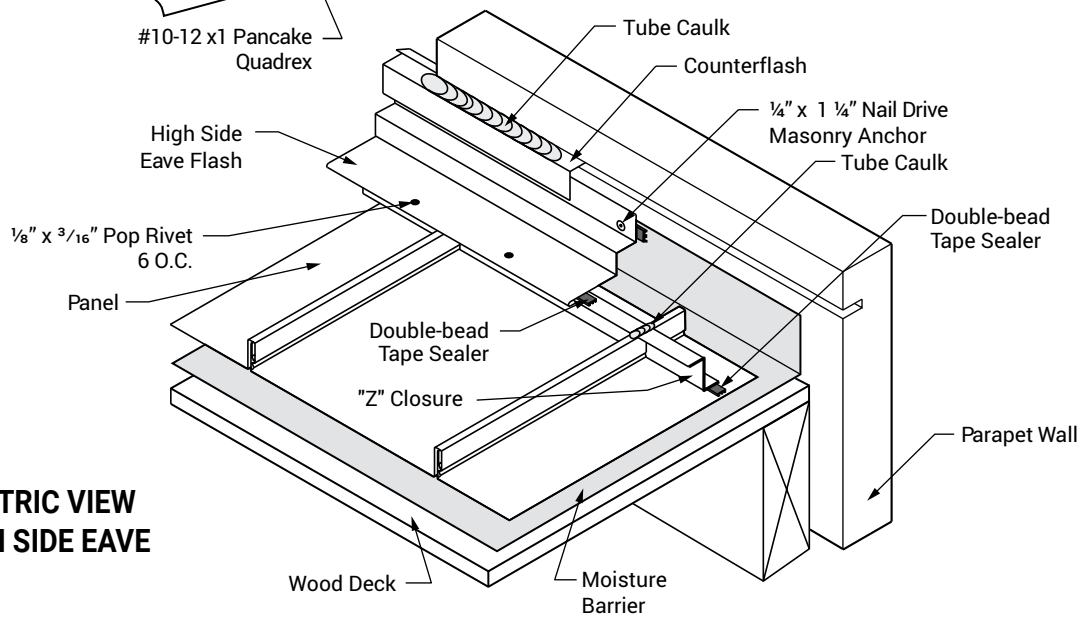

ISOMETRIC VIEW OF HIGH SIDE EAVE

NOTES:

1. Do not use this detail with fixed eave or valley details.
2. Field cut "Z" closures to fit panel width.
3. Apply Double-Bead tape sealer to panels. Center of tape sealer should be 1-1/2" from end of panel.
4. Install "Z" closures to panels with Fastener #10-12 x 1 Pancake Quadrex at 6" O.C. Vertical leg of "Z" closures should be 2" from end of panels.
5. Seal ends of "Z" closures to the panel seams with tube caulk. Apply Double-Bead tape sealer to the top leg of "Z" closures.
6. Attach parapet high side eave trim to "Z" closure with Fastener ⅛" x 3/16" Pop Rivet at 6" O.C.
7. Seal counter flash to parapet wall with tube caulk

DETAILS OVER WOOD DECK
EAVE TRIM WITH OFFSET CLEAT

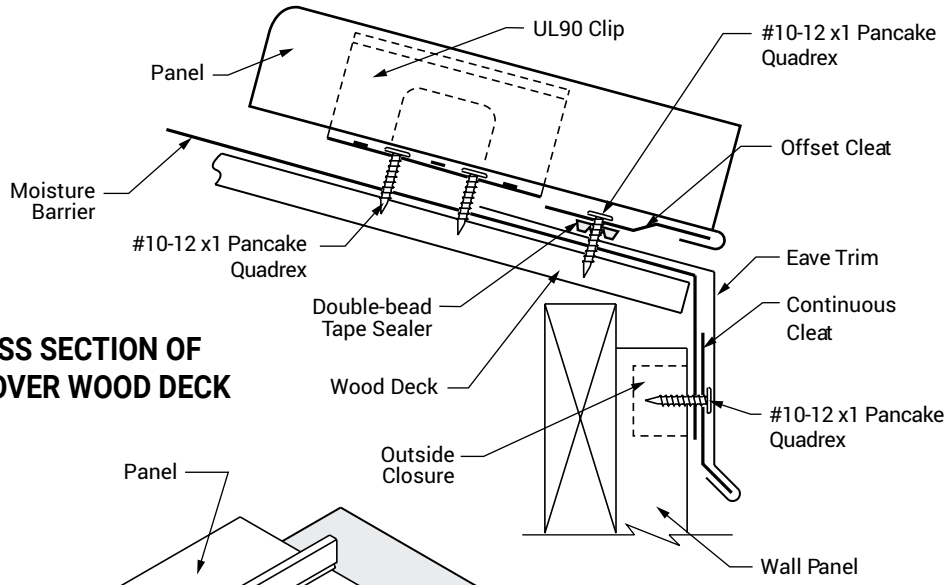

CROSS SECTION OF EAVE OVER WOOD DECK

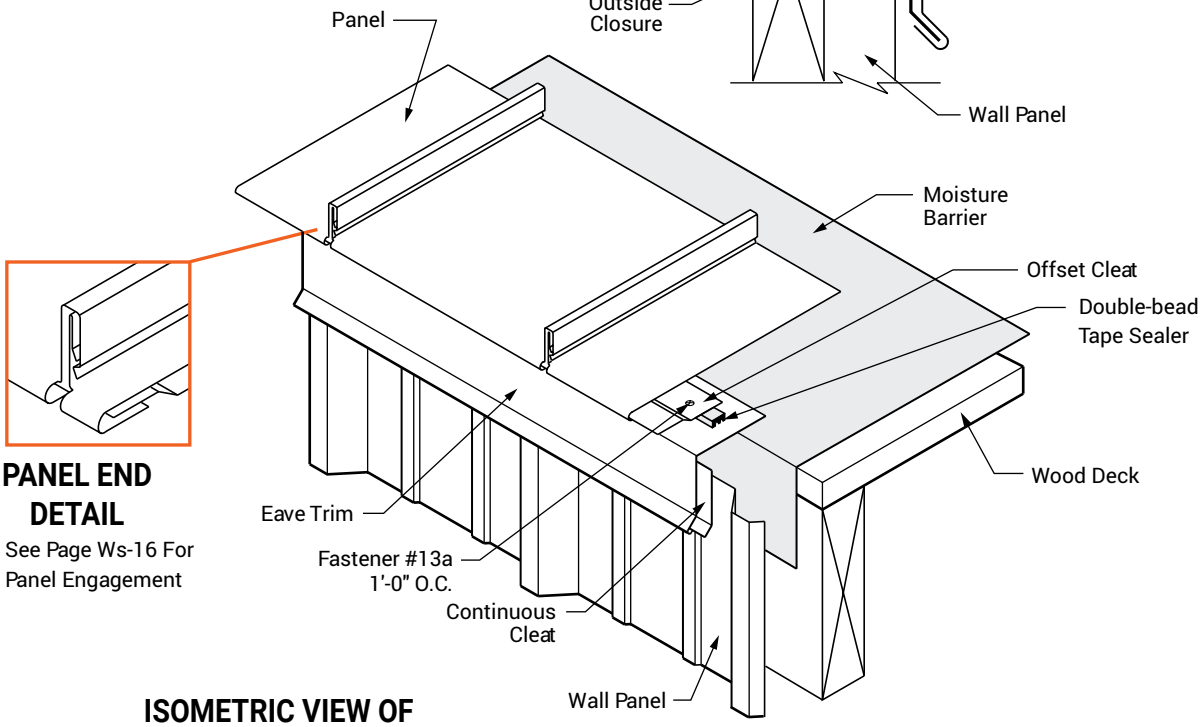

PANEL END DETAIL

See Page Ws-16 For Panel Engagement

ISOMETRIC VIEW OF EAVE OVER WOOD DECK

NOTES:

1. Panels must be attached to substructure at the ridge or hip to prevent them from sliding downslope.
2. Offset cleat is installed continuous along eave over Double-Bead tape sealer with Fastener #10-12 x 1 Pancake Quadrex at 1'-0" O.C.
3. Fasteners must go through tape sealer.
4. Clip spacing should not exceed 4'-0" O.C. for 24 gauge panels or 5'-0" O.C. for 22 gauge panels.
5. Add 1-1/2" to the panel length for the panel hem.
6. See "Panel End Sealant Detail" on page WS-15 to seal panel ends at valley.

DETAILS OVER WOOD DECK ROOF TRANSITION

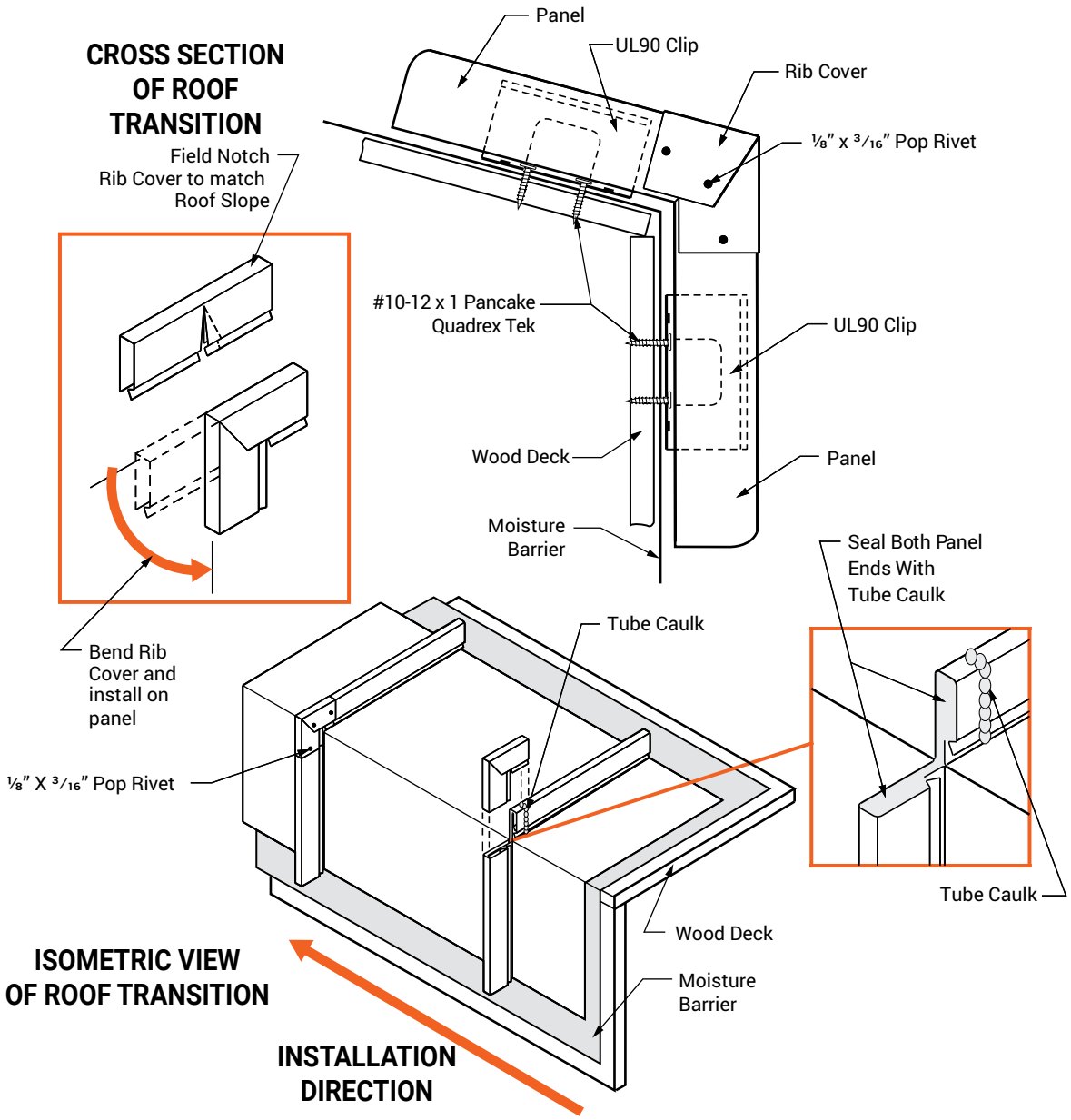

NOTES:

1. Do not use this detail with the fixed ridge or hip details.
2. Field cut legs of panels and bend to required angle.
3. Fill both exposed ends of panel with tube caulk.
4. Field notch rib cover to allow it to bend to the proper angle.
5. Field apply a bead of tube caulk over rib before applying rib cover.
6. A moisture barrier must be installed and extended a minimum of 12" up slope and behind the fascia to the bottom.
7. Do not use this detail inside the building envelope

RIGID BOARD INSULATION OVER METAL DECK

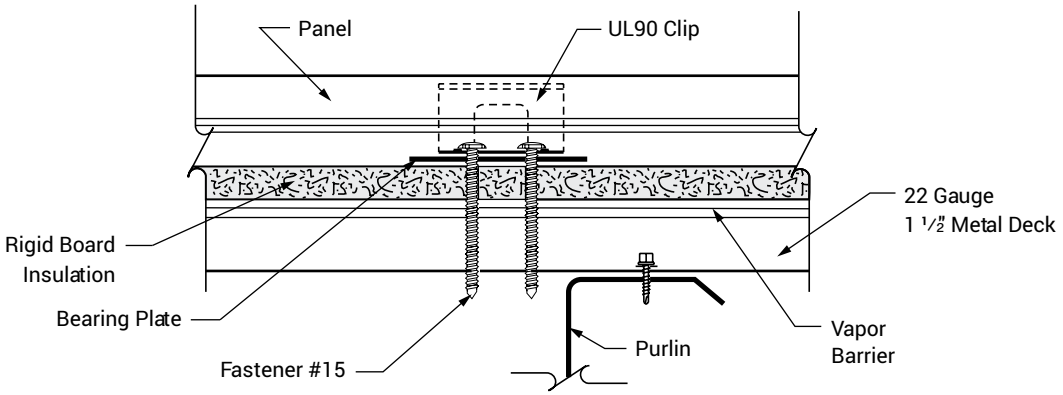

CROSS SECTION OF RIGID BOARD INSULATION OVER METAL DECK

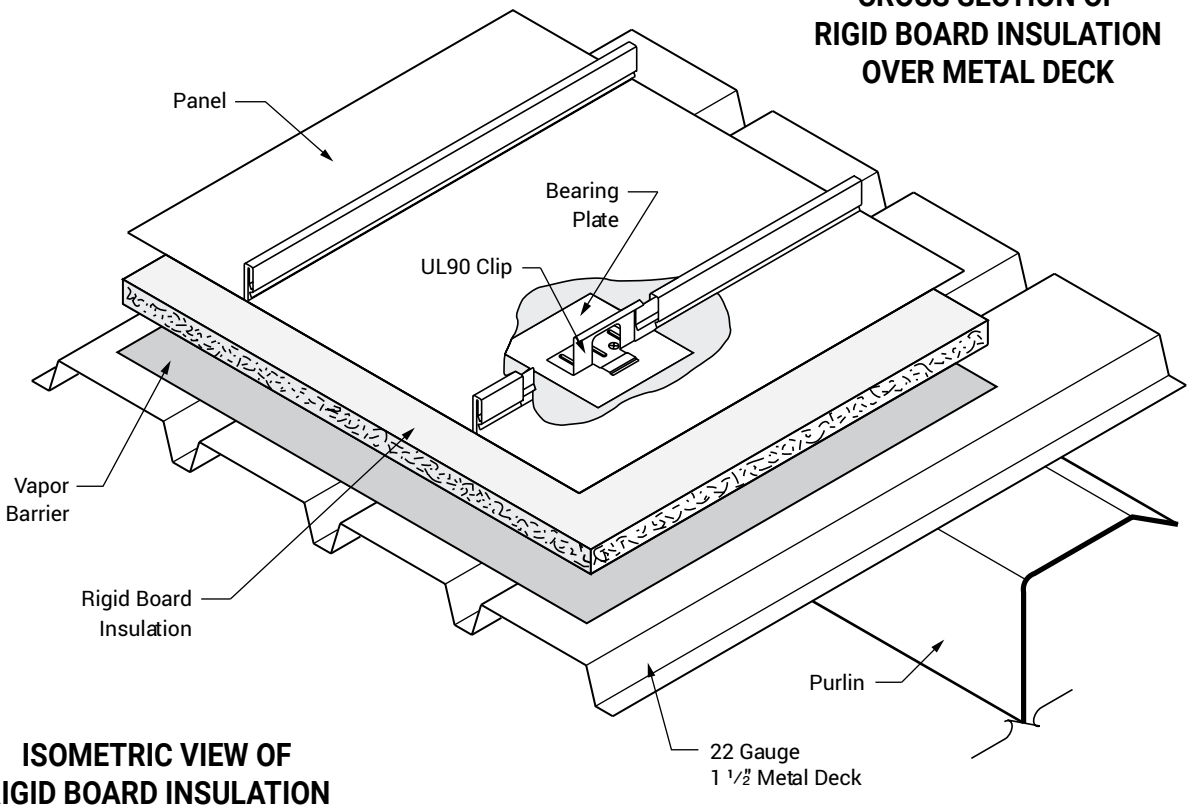

ISOMETRIC VIEW OF RIGID BOARD INSULATION OVER METAL DECK

NOTES:

1. Metal deck to be 1-1/2" deep, 22 gauge.
2. Rigid board insulation to be 1" - 4" thick.
3. Clips and bearing plates to be installed simultaneously with two Fastener 14 x 1⅝", Deck Screw Driller Phillips Truss Head into the metal deck. Length of fasteners to be determined by thickness of insulation plus depth of metal deck. Fasteners should extend 1/2" below metal deck.
4. Some composite systems require additional acoustical consideration. Contact your architect and/or engineer for proper acoustical design.

SNOW GUTTER

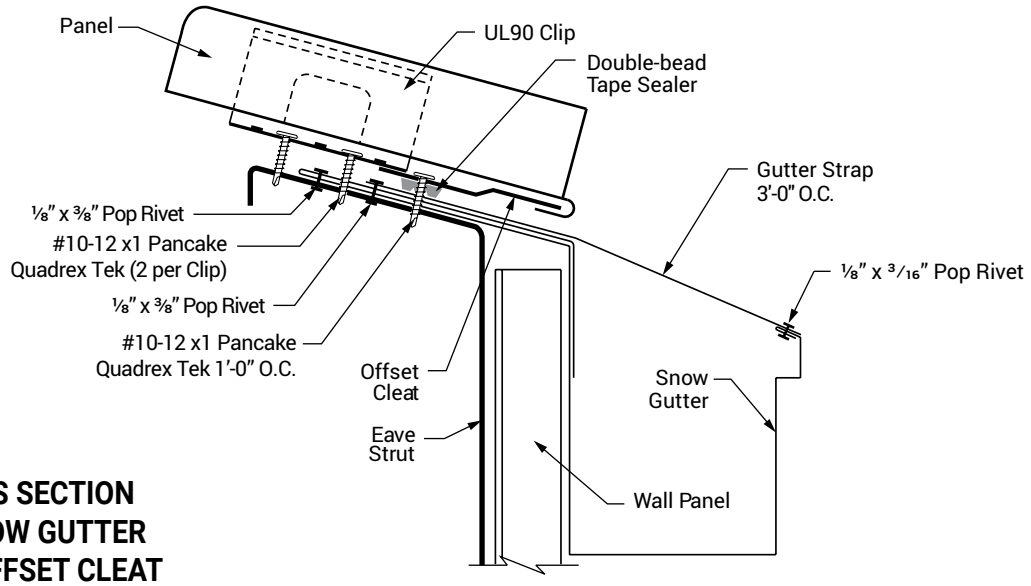

CROSS SECTION OF SNOW GUTTER WITH OFFSET CLEAT

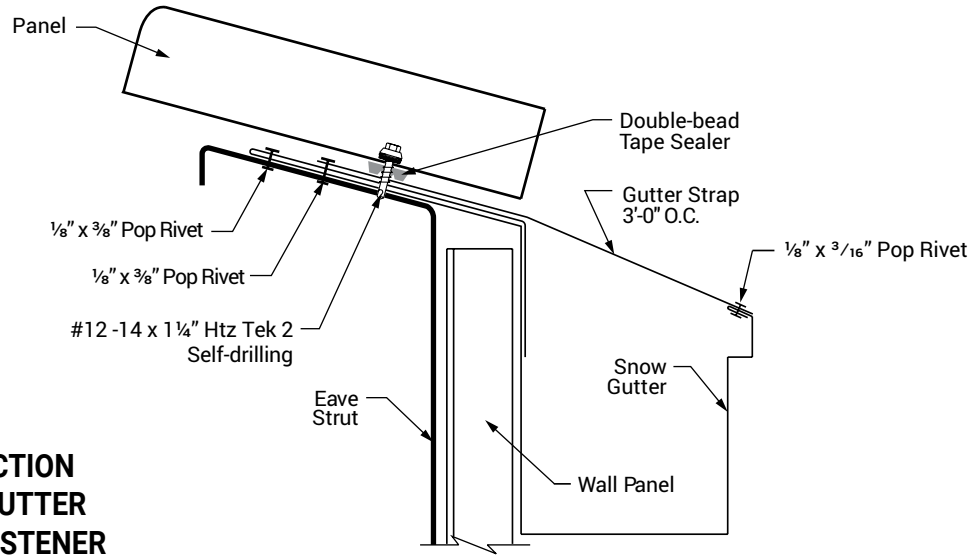

CROSS SECTION OF SNOW GUTTER THROUGH FASTENER

NOTES:

OFFSET CLEAT

1. The offset cleat method of attachment should be used when ridge, high side eave or endlap is fixed to the substructure. Panels must be attached at one of these points to prevent them from sliding downslope.
2. Attach offset cleat to eave strut with Fastener #10-12 x 1 Pancake Quadrex Tek at 1'-0" O.C. (On plywood decks replace Fastener #10-12 x 1 Pancake Quadrex Tek with Fastener #10-12 x 1 Pancake Quadrex).
3. To field hem panel, see page WS-27.
4. See "Panel End Sealant Detail at Eave" on page WS-15 to seal panel ends.

THROUGH FASTENED

1. Do not use this detail with the fixed ridge or hip details.
2. Attach gutter to eave strut with Fastener ⅛" x ⅜" Pop Rivet (3 fasteners per 10' piece).
3. Attach gutter straps to gutter with Fastener ⅛" x 3/16" Pop Rivet at 3'-0" O.C.
4. Apply Double-Bead tape sealer to slope leg of gutter.
5. Install panel and fasten to eave strut with four Fastener #12 -14 x 1¼" Htz Tek 2 Self-Drilling.
6. See "Panel End Sealant Detail at Eave" on page WS-15 to seal panel ends.

NOTES

NOTES

WHIRLWIND

WEBUILDFORLIFE

WHIRLWINDSTEEL.COM
(800) 324 9992