WHIRLWINDSTEEL
BUILDINGS & COMPONENTS

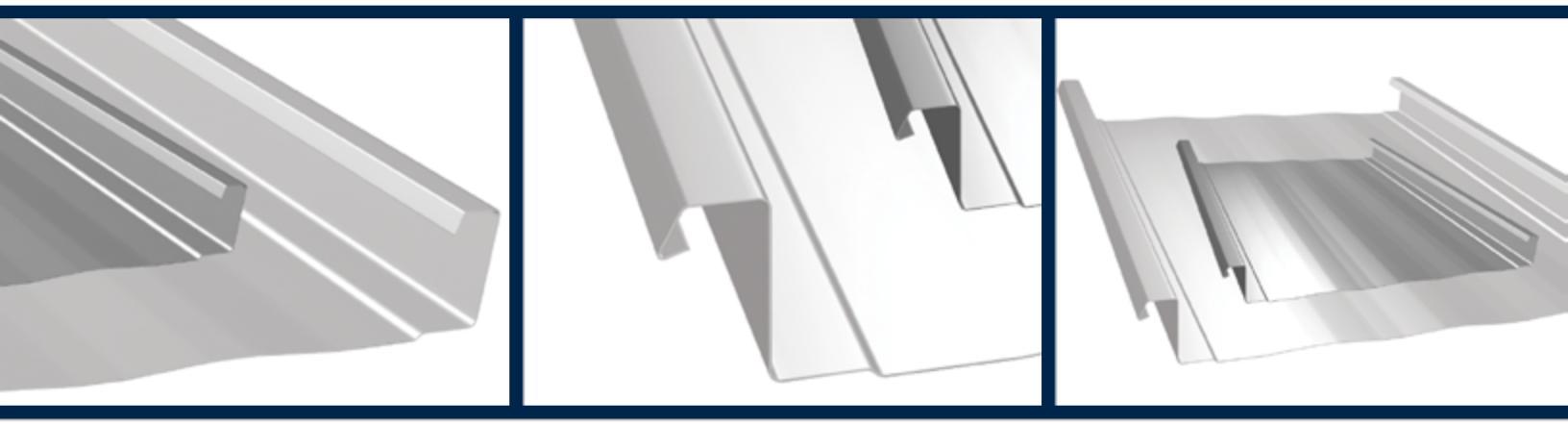

TECHNICAL ERECTION MANUAL WEATHER LOK™-16

8234 Hansen Road
Houston, TX 77075

(800) 324 9992 Toll Free

(832) 553 4992 Fax

IMPORTANT NOTICE

PLEASE READ THIS MANUAL COMPLETELY PRIOR TO BEGINNING INSTALLATION OF THE WEATHER LOK-16 ROOFING SYSTEM.

IF THERE IS A CONFLICT BETWEEN PROJECT ERECTION DRAWINGS PROVIDED AND/OR APPROVED BY WHIRLWIND STEEL BUILDINGS, INC AND DETAILS IN THIS MANUAL, PROJECT ERECTION DRAWINGS WILL TAKE PRECEDENCE.

©Whirlwind Steel buildings, Inc. All Rights Reserved.

Descriptions and specifications contained herein were in effect at the time this publication was approved for printing. In a continuing effort to refine and improve products, Whirlwind reserves the right to discontinue products at any time or change specifications and/or designs without incurring obligation. To insure you have the latest information available, please inquire or visit our Web Site at www.whirlwindsteel.com

TABLE CONTENTS

ENGINEERING

Underwriters / Design Properties WL-4-5

GENERAL INFORMATION

General Description WL-6
Installation Notes WL-7-8
Preparatory Requirements WL-9
Unloading WL-10-11
Handling & Storage WL-12
Product Checklist WL-13-14
Panel Description and Nomenclature WL-15

ERECTION SEQUENCE

Rake Support WL-16
Low System Eave WL-17
High System Eave WL-18
First Panel Low System WL-19-20
First Panel High System WL-21
First Panel Endlap WL-22
Endlap Panel WL-23
Upslope Panel WL-24
Second Panel Run WL-25-27
End Dam WL-28
Last Panel Run WL-29

Ridge Cap Installation WL-30
Gutter Attachment Detail WL-31
Corner Box Details WL-32-33
High Side Eave Trim Installation WL-34
High Eave Parapet WL-35
Valley Detail High System WL36
Floating Hip Low System WL-37
Parapet Rake WL-38
Vented Ridge WL-39
Curb Installation WL-40-52
Roof System Seaming Guide WL-53-63
Operating the Seaming Machine WL-64-66
Seaming Machine Maintenance WL-67

UNDERWRITERS LABORATORIES APPROVAL								
Construction Number	Panel Width (In.)	Gauge	Clip Type	Clip Spacing	Substrate	UL-2218 Impact Resistance	UL-263 Fire Rating	UL-580 Rating
506	16″	24 min.	**	5′-0″	Open Framing	Class 4	Class A	Class 90
506A	16″	24 min.	**	4′-0″	Composite System	Class 4	Class A	Class 90
506B	16″	24 min.	**	2′-6″	Plywood	Class 4	Class A	Class 90

**Fixed or Floating (high or low)

**Fixed or Floating (high, low, or utility)

NOTES:

1. Tests procedures are in accordance with Underwriters Laboratories Standard UL-580 under "Tests For Uplift Resistance of Roof Assemblies".
2. A detailed installation method is available for each Construction Number above and can be found in the UL Roofing Materials and Systems Directory. The panels must be installed in certain manner to achieve the published results.
3. The panel qualifies for a Class A fire rating in compliance with Underwriters Laboratories Standard UL-263.
4. The panel system qualifies under the following Fire Resistance Design Numbers: P224, P225, P227, P230, P233, P237, P265, P268, P508, P701, P711, P801, P803.
   Refer to the UL Fire Resistance Directory for specific construction methods and hourly ratings.

CAUTION
Diaphragm capabilities and purlin stability are not provided by Whirlwind's Weather Lok-16 Roof system. Therefore, other bracing may be required to conform to A.I.S.C or A.I.SI. Specifications.

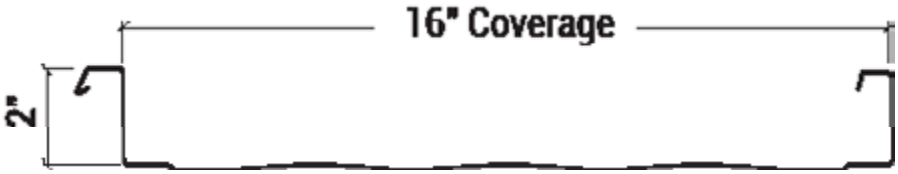

WEATHER LOK-16 DESIGN PROPERTIES						
			TOP IN COMPRESSION		BOTTOM IN COMPRESSION	
PANEL GAUGE	F_y (KSI)	Weight (PSF)	I_x (In^4-Ft)	M_a (Kip-In/Ft)	I_x (In^4-Ft)	M_a (Kip-In/Ft)
24	50	1.23	0.1478	2.7134	0.1553	2.8852
22	50	1.56	0.1950	3.6264	0.1950	3.6264

NOTES:

1. All section properties are calculated in accordance with the 2001 edition of the North American Specification For Design Of Cold-Formed Steel Structural Members.
2. Ix is for deflection determination.
3. Mx is allowable bending moment.

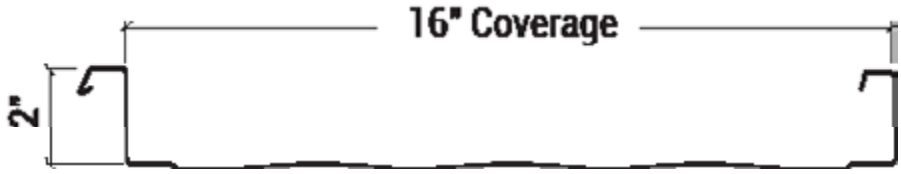

ALLOWABLE UNIFORM LOADS IN POUNDS PER SQUARE FOOT

24 Gauge (Fy = 50 KSI)

SPAN TYPE	LOAD TYPE	SPAN (FEET)								
		1.0	1.5	2.0	2.5	3.0	3.5	4.0	4.5	5.0
SINGLE	NEGATIVE WIND LOAD	1923.5	854.9	480.9	307.8	213.7	157.0	120.2	95.0	76.9
	POSITIVE WIND/LIVE LOAD	444.6	296.4	222.3	177.8	148.2	127.0	111.1	89.3	72.4
2-SPAN	NEGATIVE WIND LOAD	1263.1	678.7	417.0	279.6	199.6	147.7	113.1	89.3	72.4
	POSITIVE WIND/LIVE LOAD	340.2	226.8	170.1	136.1	113.4	97.2	85.0	75.6	68.0
3-SPAN	NEGATIVE WIND LOAD	1412.0	786.9	494.9	336.9	242.7	182.6	141.3	111.7	90.4
	POSITIVE WIND/LIVE LOAD	386.6	257.7	193.3	154.6	128.9	110.5	96.6	85.9	77.3
4-SPAN	NEGATIVE WIND LOAD	1367.5	753.5	470.4	318.6	228.8	171.8	132.0	104.3	84.5
	POSITIVE WIND/LIVE LOAD	372.0	248.0	186.0	148.8	124.0	106.3	93.0	82.7	74.4

22 Gauge (Fy = 50 KSI)

SPAN TYPE	LOAD TYPE	SPAN (FEET)								
		1.0	1.5	2.0	2.5	3.0	3.5	4.0	4.5	5.0
SINGLE	NEGATIVE WIND LOAD	2417.6	1074.5	604.4	386.8	268.6	197.4	151.1	119.4	96.7
	POSITIVE WIND/LIVE LOAD	753.0	502.0	376.5	301.2	251.0	197.4	151.1	119.4	96.7
2-SPAN	NEGATIVE WIND LOAD	1817.0	927.4	553.4	365.0	257.8	191.4	147.6	117.2	95.2
	POSITIVE WIND/LIVE LOAD	546.6	364.4	273.3	218.6	182.2	156.2	136.6	117.2	95.2
3-SPAN	NEGATIVE WIND LOAD	2080.8	1099.2	668.5	445.6	316.8	236.2	182.6	145.3	118.3
	POSITIVE WIND/LIVE LOAD	621.1	414.1	310.5	248.4	207.0	177.5	155.3	138.0	118.3
4-SPAN	NEGATIVE WIND LOAD	2000.4	1045.1	631.6	419.5	297.6	221.6	171.1	136.1	110.7
	POSITIVE WIND/LIVE LOAD	597.7	398.5	298.9	239.1	199.2	170.8	149.4	132.8	110.7

NOTES:

1. Allowable loads are based on uniform span lengths and Fy = 50 ksi.
2. LIVE LOAD is limited by bending, shear, combined shear & bending and web crippling and deflection of L/180.
3. NEGATIVE WIND LOAD is limited by bending, shear, combined shear and bending and deflection of L/180. NEGATIVE WIND LOAD Deflection has been increased by 30% per IBC 2003 Table 1604.3.
4. NEGATIVE WIND LOAD does not consider fastener pullout or pullover.
5. The weight of the panel has not been deducted from the allowable loads.

The Engineering data contained herein is for the expressed use of customers and design professionals. Along with this data, it is recommended that the design professional have a copy of the most current version of the North American Specification for the Design of Cold-Formed Steel Structural Members published by the American Iron and Steel Institute to facilitate design. This Specification contains the design criteria for cold-formed steel components. Along with the Specification, the designer should reference the most current building code applicable to the project job site in order to determine environmental loads. If further information or guidance regarding cold-formed design practices is desired, please contact the manufacturer.

GENERAL DESCRIPTION

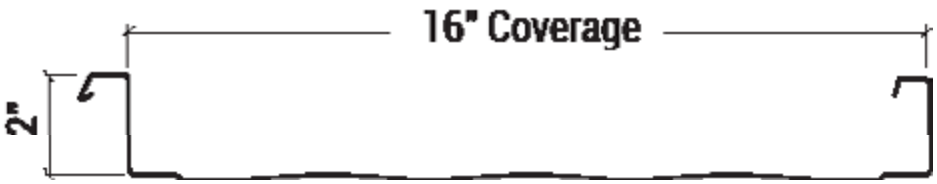

Coverage Width	16”
Minimum Slope	1/2: 12
Panel Attachment	Low, High (Fixed, Floating), or utility (no insulation clearance)
Panel Substrate	Galvalume ® (standard)
Gauge	24 GA
Coatings	Galvalume Clear Acrylic, Fluropon® PVDF (Kynar®)

CAUTION
Diaphragm capabilities and purlin stability are not provided by Whirlwind’s Weather Lok-16 Roof system. Therefore, other bracing may be required to conform to A.I.S.C or A.I.SI. Specifications.

1.0 GENERAL

1.1 PURPOSE OF THE INSTALLATION GUIDE

This installation guide is provided to Whirlwind customers and their erectors as the recommended procedure for the correct assembly of the Weather Lok™-16 standing seam roof system. This guide is intended to be used in conjunction with the erection drawings to help plan and organize the installation of the Weather Lok™-16 system. The erection drawings govern specific part arrangement and identify the applicable roof conditions. The instructions will help identify parts, establish the installation sequence, demonstrate correct assembly, and point out any areas or procedures requiring special emphasis or attention. This installation guide applies to the standard Weather Lok™-16 system. Custom roof conditions, including custom details and instructions, will be covered by the erection drawings. In case of conflict between this installation guide and the erection drawings, the erection drawings will govern.

1.2 CUSTOMER RESPONSIBILITY

The customer is responsible for proper installation of the roof in accordance with the erection drawings, this installation guide, and in accordance with good engineering and construction practices. The customer must take responsibility for selecting a competent erector, insist that the work be performed by qualified and experienced standing seam material roof installers, insist that the erector take time to understand this guide, then ensure that the erector correctly follows the guide instructions. Whirlwind does not guarantee and is not liable for the quality of erection. Whirlwind Steel Buildings, Inc. is not responsible for building defects that may be attributed to improper erection or the negligence of other parties. Clarification concerning the Weather Lok™-16 roof installation should be directed to the Customer Service Department at:

Whirlwind Steel Buildings, Inc.
Attention: Customer Service Department
8234 Hansen Road
Houston TX 77074

800-324-9992
832-553-4993 (fax)

2.0 SAFE ROOF INSTALLATION

2.1 ERECTOR'S RESPONSIBILITY

The erector of the roof system is responsible for the safe execution of this installation guide. These instructions are intended to describe the sequence and proper placement of parts. They are not intended to prescribe comprehensive safety procedures. If the erector cannot safely assemble the roof in accordance with these instructions, it is the responsibility of the erector to stop the work and contact the general contractor, owner, or Whirlwind Building Systems to determine alternate assembly procedures.

2.2 OSHA

The Occupational Safety and Health Act (OSHA) has created many regulations applicable to the installation of this or any other roof system. These regulations, identified as part 1926, Safety and Health Regulations for Construction, are available from any government book store. The objective of the OSHA standards is to protect the worker from injury or illness. These OSHA regulations should be recognized as job site requirements and fully complied with. Failure to do so may result in substantial fines in the event of an OSHA inspection. Safe installation practices may be further defined and made mandatory by state or local ordinances. Maintaining good housekeeping on the job site is recognized as being important to both OSHA compliance and to successful job completion.

2.3 WALKING AND WORKING ON ROOF PANELS

A. Placing Panels On The Structure

Do not place bundles of panels on the roof structure without first verifying the structure will safely support the concentrated weight of the panels and the weight of the installation crew. Some roof structures may not be designed to support the weight of a full panel bundle without additional structural support.

B. Panels Are Not A Walking Platform

Do not use the panels as a walking platform. The erector should provide a safe platform to walk on while installing roof panels. Excessive foot traffic during installation could cause unacceptable deflections in the panels and detract from the appearance of the finished roof.

C. Safety Equipment

The use of safety equipment for the roof panel installation is recommended at all times during the installation process. However, when using lanyard, ensure that the clasp, belt hooks and wire cables are covered in such a manner that they will not scratch the panel surface if accidentally dragged along the panel.

D. Crew Size

The length of the individual roof panels should be considered when determining the crew size. It is recommended that, under normal conditions, there will be one person for every eight to ten feet of panel length, plus one.

E. Panel Overhang

Do not stand on the end of unsupported (cantilevered) panels at the eaves or ridge. Standing on the cantilevered portion may result in panel damage and/or personal injury.

PREPARATORY REQUIREMENTS

1. Whirlwind has field seaming kits available for installation of the Weather Lok-16 roof system. To reserve a kit, please complete a Weather Lok-16 Seaming Tool Rental Agreement and return it to your Whirlwind representative. This form should be submitted as soon as possible to ensure kit availability. Other types of field seaming machines may properly seam the Whirlwind Weather Lok-16 panels; Whirlwind cannot be responsible for any damage when another type of field seamer tool is used.

2. A single pitch eave strut must be used with the Weather Lok-16 roof system.

3. A rake angle or an alternate structural flat surface must be installed on top of the purlins to accept the rake support.

4. All primary and secondary framing must be erected, plumbed and squared with bolts tightened according to accepted building practices.

5. The substructure (eave to ridge) must be on plane (¼" in 20' or ⅜" in 40' tolerance).

6. It is critical that the purlins or bar joists at the ridge and end laps be located exactly as detailed and that they are straight from rafter to rafter. Any mislocation or bowing of these members can cause the fasteners at the ridge or end laps to foul as the panels expand and contract.

7. Peak Purlin Spacing - 24" (12" from the center line of the ridge to the web of the purlin).

8. For low systems without insulation, ⅜" thermal spacers are required. For low systems with up to 4" of insulation, spacers are not required. Maximum insulation thickness is 4". For high systems with up to 3" of insulation,⅝" or 1" thermal spacers are required. For high systems with more than 3" of insulation, ⅜" thermal spacers are required. Maximum insulation thickness is 6".

9. Whirlwind recommends the use of a screw gun with a speed range of 0-2000 RPM to properly install all fasteners referenced in this manual. Tools rated to 4000 RPM should never be used for self-drilling fasteners typically supplied with metal roof and wall systems.

CAUTION

Application and design details are for illustration purpose only and may not be appropriate for all environmental conditions or building designs. Projects should be engineered to conform to applicable building codes, regulations, and accepted industry practices.

CAUTION

Avoid restricting the thermal expansion and contraction of the Weather Lok-16 panels.
(i.e. Do not attach panel to the substructure at both the eave and ridge.)

WARNING

Light transmitting panels are not designed or intended to bear the weight of any person walking, stepping, standing or resting on them. WHIRLWIND DISCLAIMS ANY WARRANTY OR REPRESENTATION, EXPRESS OR IMPLIED, that any person can safely walk, step, stand or rest on or near these light transmitting panels or that they comply with any OSHA regulation.

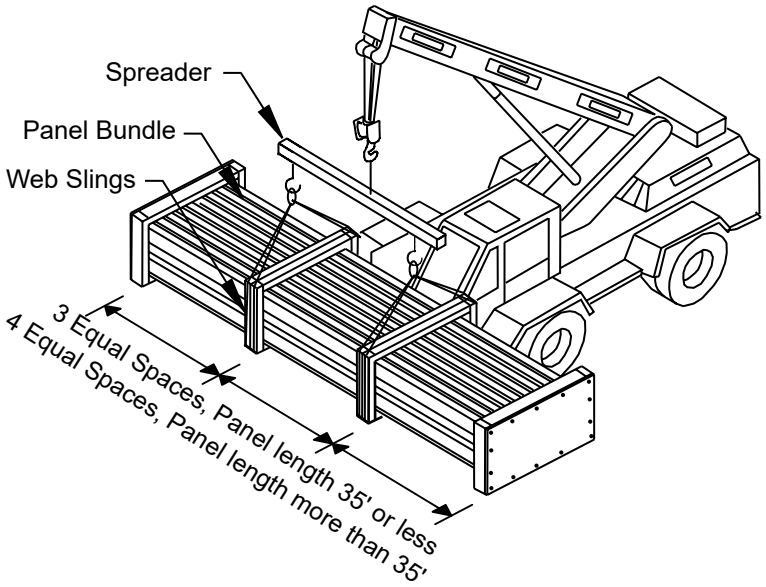

Panels over 25'

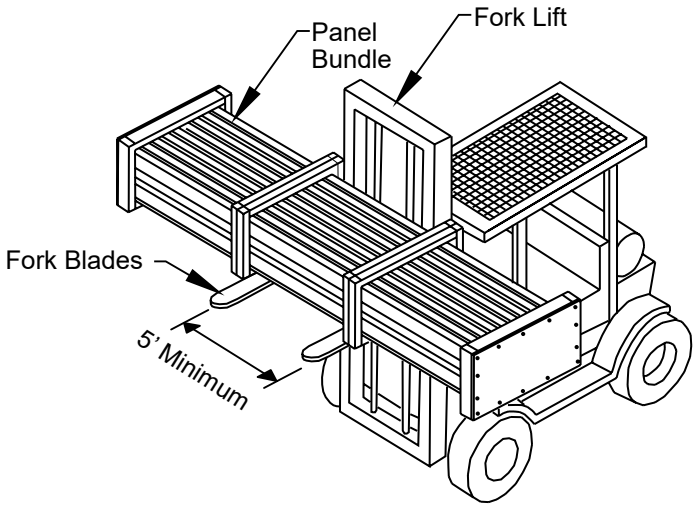

Limited to 25'

UNLOADING

Upon receiving material, check shipment against shipping list for shortages and damages unless they are noted on the shipping list.

Each bundle should be lifted at its center of gravity. Where possible, bundles should remain banded until final placement on roof. If bundles must be opened, they should be retied before lifting.

When lifting bundles with a crane, a spreader bar and nylon straps should be used. NEVER USE WIRE ROPE SLINGS OR CHAINS THEY WILL DAMAGE THE PANELS.

When lifting bundles with a forklift, forks must be a minimum of five feet apart. Do not transport open bundles. Drive slowly when crossing rough terrain to prevent panel buckling.

CAUTION
Improper unloading and handling of bundles and crates may cause bodily injury or material damage. The manufacturer is not responsible for bodily injuries or material damages during unloading and storage.

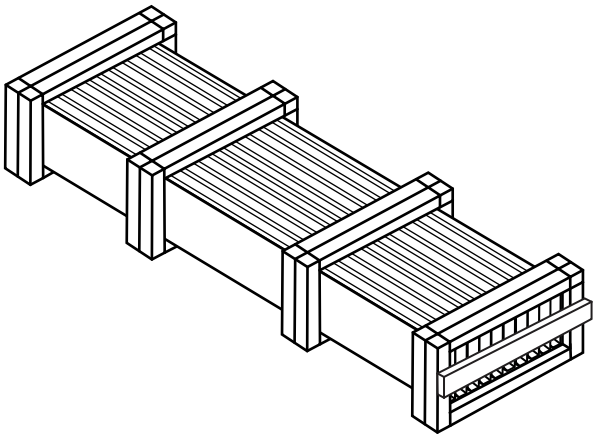

UNLOADING
(Continued)

BLOCK AND BAND

This method of bundling is used for orders that are to be picked up by the customer or shipped by common carrier. 2X4's are strapped under the bundles to allow access for straps or a forklift. Bundle less than 25' long can be handled by a forklift. The forklift should have at least 5' between forks. Bundles longer than 25' should be lifted utilizing a spreader bar with nylon straps.

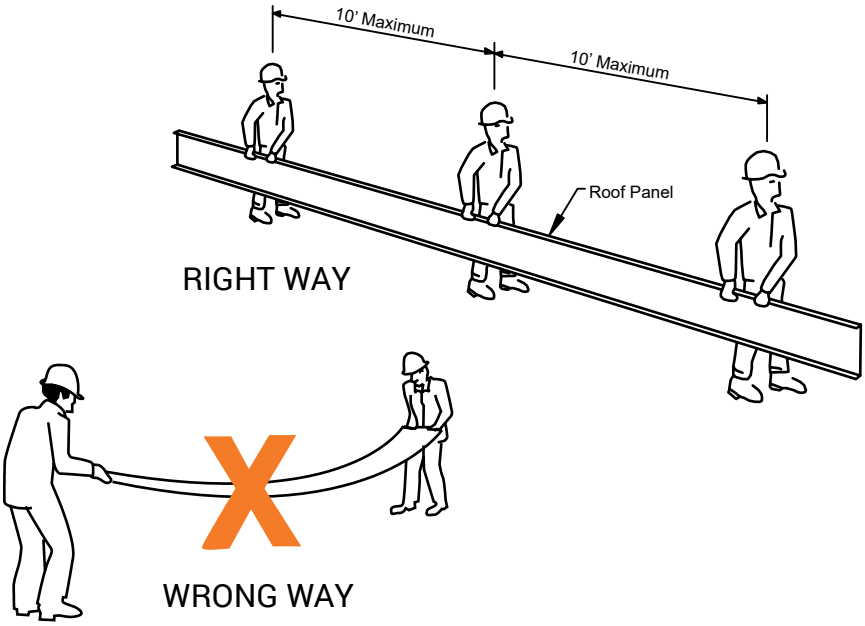

HANDLING/PANEL STORAGE

Standing on one side of the panel, lift it by the seam. If the panel is over 10' long, lift it with two or more people on one side of the panel too prevent buckling.

Do not pick panels up by the ends.

NOTE
Protective gloves should always be used while handling panels. OSHA safety regulations must be followed at all times.

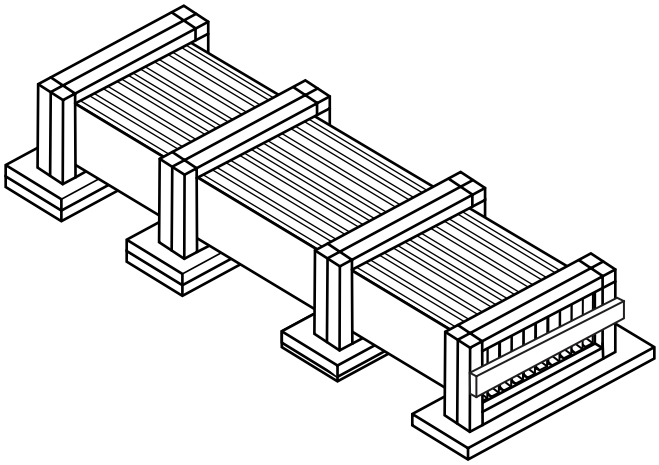

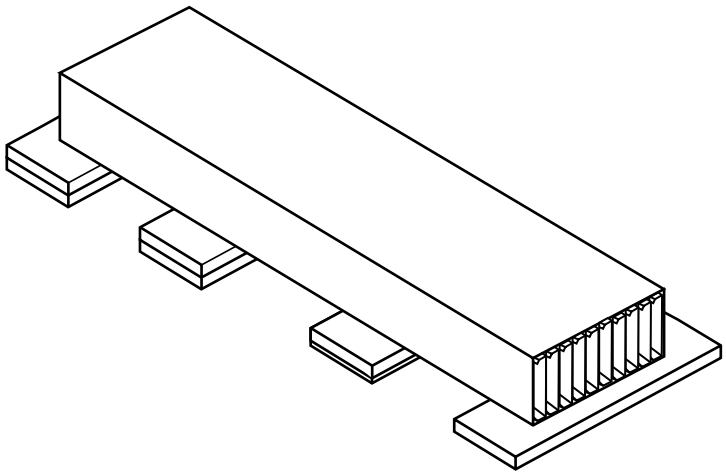

Store bundle sheets off the ground sufficiently high enough to allow air circulation beneath bundle and to prevent rising water from entering bundle. Slightly elevate one end of bundle. Prevent rain from entering bundle by covering with tarpaulin, making provision for air circulation between draped edges of tarpaulin and the ground. **PROLONGED STORAGE OF SHEETS IN A BUNDLE IS NOT RECOMMENDED**. If conditions do not permit immediate erection, extra care should be taken to protect sheets from white rust or water marks.

Check to see that moisture has not formed inside the bundles during shipment. If moisture is present, panels should be uncrated and wiped dry, then restacked and loosely covered so that air can circulate between the panels.

TECHNICAL ERECTION MANUAL WEATHER LOK™ - 16

PRODUCT CHECKLIST

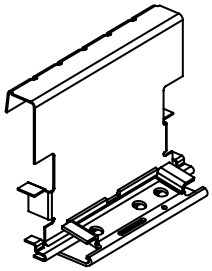

☐ ARCHITECTURAL CLIP
MC-2120

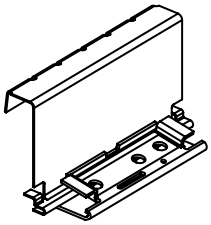

☐ ARCHITECTURAL CLIP
MC-1203

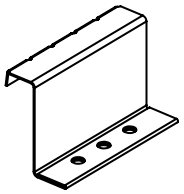

☐ FIXED UTILITY CLIP
FC-10200

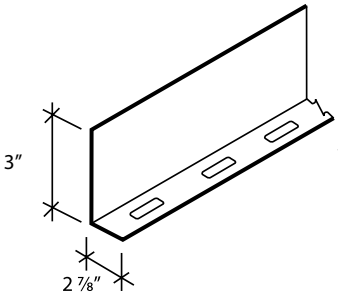

☐ RAKE SUPPORT,
HIGH

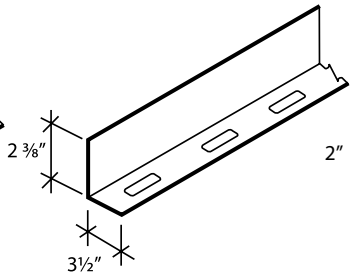

☐ RAKE SUPPORT,
LOW

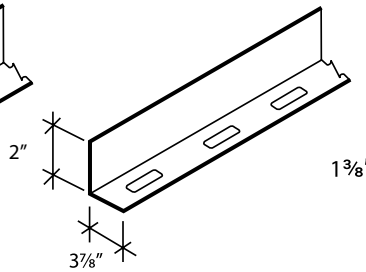

☐ RAKE SUPPORT,
UTILITY

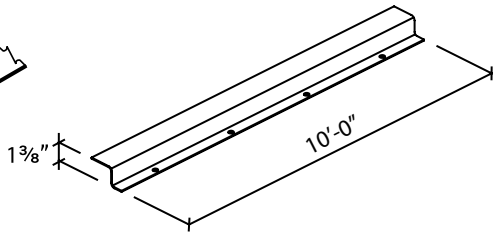

☐ EAVE PLATE,
HIGH

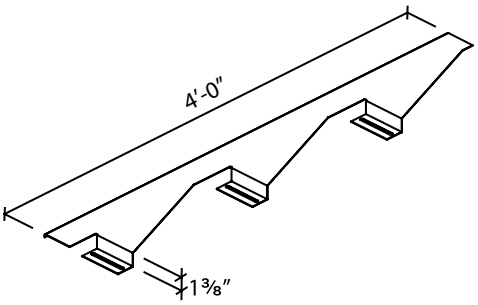

☐ HIGH BACK-UP PLATE
WLBPH

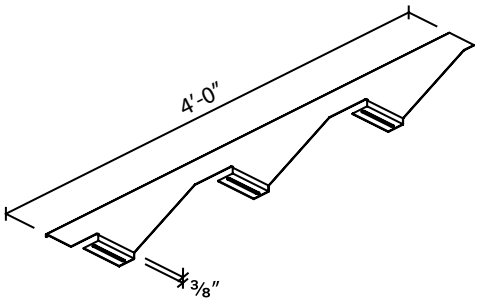

☐ LOW BACK-UP PLATE
WLBPL

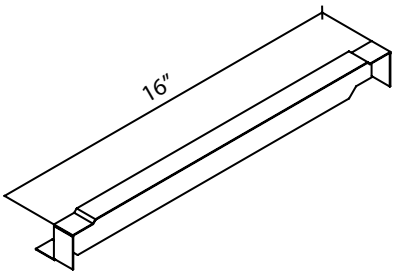

☐ END DAM
WLED

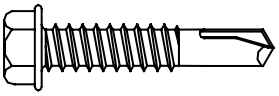

☐ ¼" - 14 x 1¼" Tek-2
Self-Driller

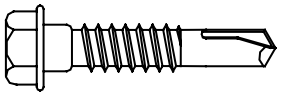

☐ ¼" - 14 x 1¼" Shoulder Tek 2
Ò" Hex Washer Head, no washer

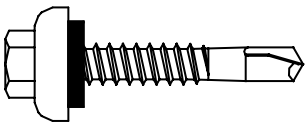

☐ #12 x1¼" long-life
Self-Driller

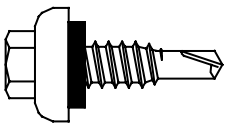

☐ ¼" - 14 x ⅞" Lap Tek Long Life
Self-Driller, Ò" Hex Washer Head
with sealing washer

TECHNICAL ERECTION MANUAL WEATHER LOK™ - 16

PRODUCT CHECKLIST

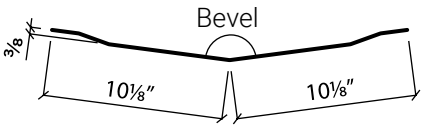

☐ LOW VALLEY PLATE
PM102

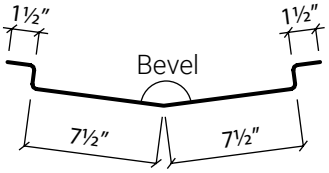

☐ HIGH VALLEY PLATE
PM103

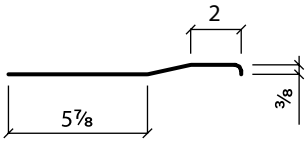

☐ LOW HIP PLATE
PM104

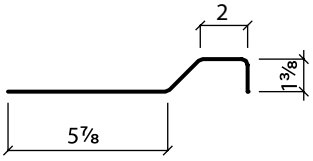

☐ HIGH HIP PLATE
PM105

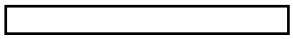

☐ TAPE SEALER
1½″ x 3/32″

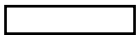

☐ TAPE SEALER
1″ x 3/32″

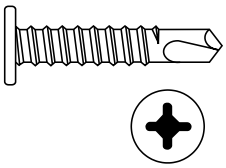

☐ #10 X 1″
PANCAKE HEAD DRILLER

☐ TRIPLE BEAD
TAPE SEALER

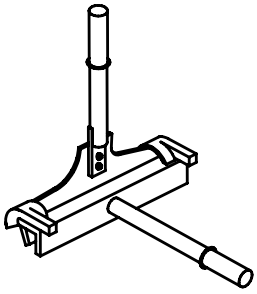

☐ HAND SEAMER
(REQUIRES RENTAL FROM
THIRD PARTY)

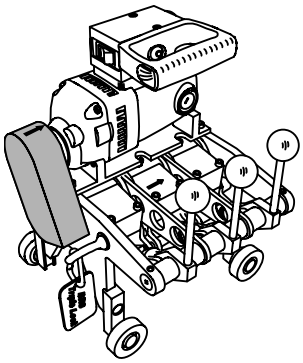

☐ MECHANICAL SEAMER
(REQUIRES RENTAL FROM
THIRD PARTY)

☐ RIDGE TRIM
RC-61

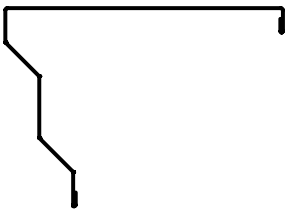

☐ RAKE TRIM
RT-505

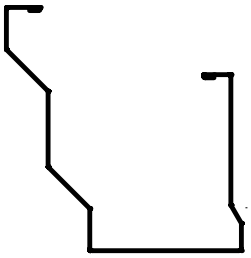

☐ GUTTER TRIM
GU-600

PANEL DESCRIPTION AND NOMENCLATURE

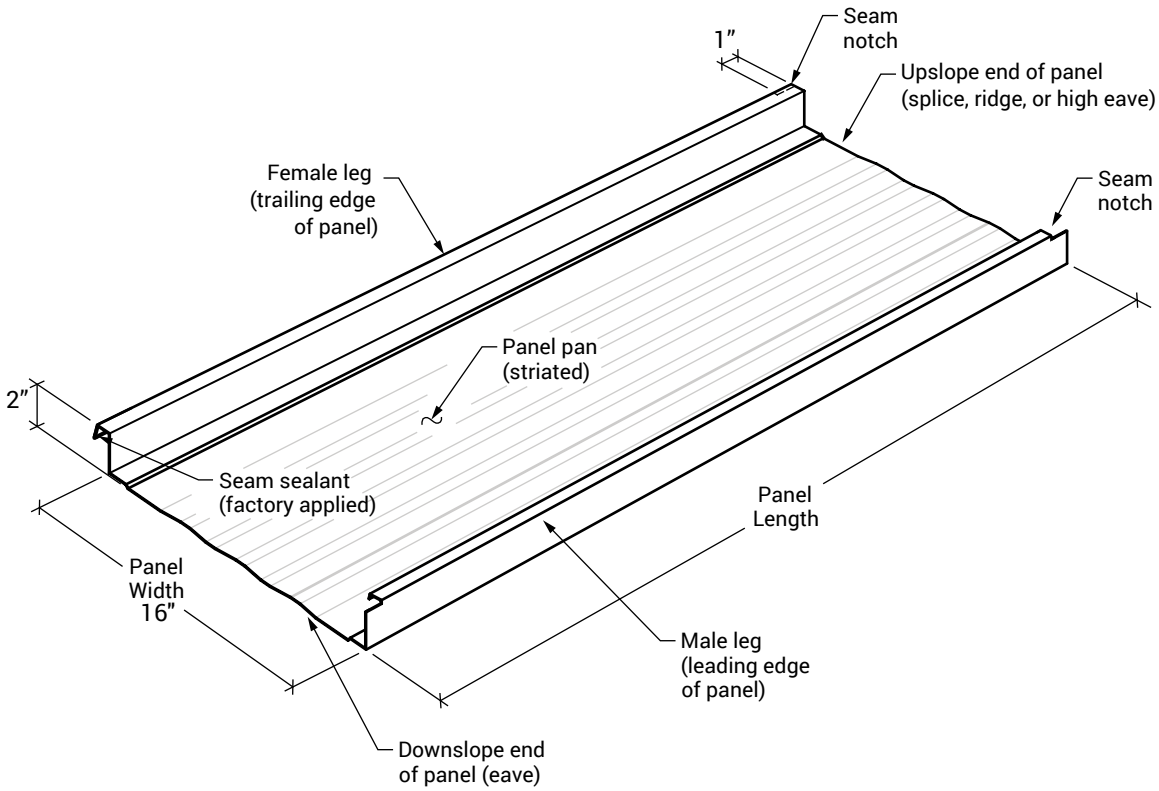

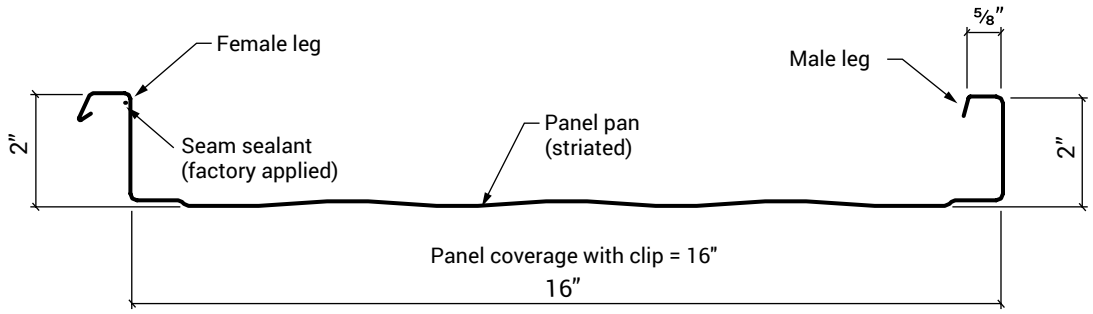

NOTES:

1. Throughout this manual, references to the panel will be made using the terms shown on the above illustrations.
2. Although the panel striations are standard, they may not be shown for the sake of clarity.

STEP 1 RAKE SUPPORT

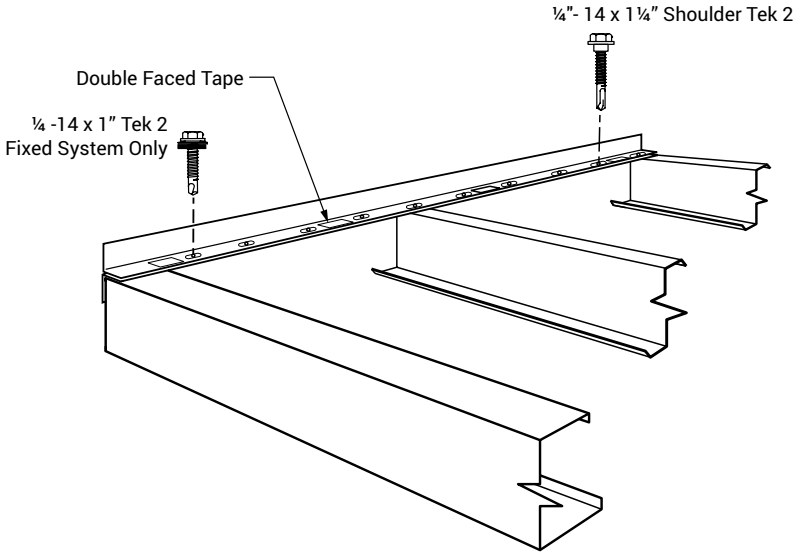

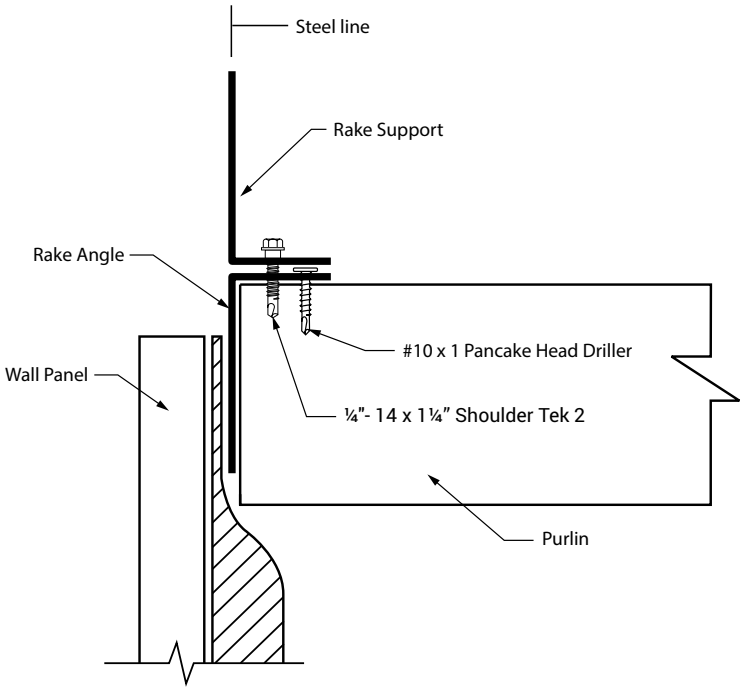

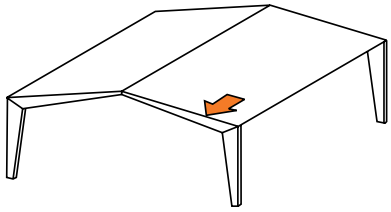

Attach the rake support on top of the rake angle with the proper self-drilling fasteners on 2'-0" centers with a fastener in the first and last prepunched slot. The vertical leg is to be installed square with the eave. Center fasteners in slots.

FASTENER REQUIREMENTS
FIXED SYSTEM
Purlins - Fastener
¼" - 14 x 1" Tek 2
Joist- Fastener
12- 24 x 1¼" Tek 5
FLOATING SYSTEM
Purlins-Fastener
¼" -14 x 1¼" Shoulder Tek 2

IT IS IMPORTANT THAT THE RAKE SUPPORT IS INSTALLED STRAIGHT AND SQUARE WITH THE EAVE AS IT CONTROLS THE ALIGNMENT OF THE ROOF SYSTEM.

Install 6" pieces of double faced tape on 3'-0" centers to the top of the horizontal leg of the rake support. This will help hold the insulation in place at the rake.

CAUTION
(For Floating Systems Only)
It is important that shoulder fasteners are installed through the CENTER of the slotted holes of the rake support to allow for expansion and contraction.

CAUTION
ALL PRIMARY AND SECONDARY FRAMING SHOULD BE ERECTED, PLUMBED, AND BOLTS TIGHTENED PRIOR TO SHEETING.

STEP 2 LOW SYSTEM EAVE

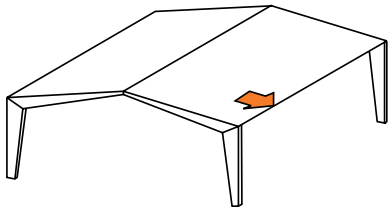

A WALL PANEL INSTALLED BEFORE ROOF

Install counterflash by attaching to wall panel with ⅛ x ³/₁₆" Pop Rivet. Use three fasteners per 10' piece.

Lay 1 x ³/₃₂" Tape Sealer across the top of the trim.

Install double faced tape along the length of the Eave Strut.

B. WALL PANEL INSTALLED AFTER ROOF

Install offset counterflash to eave strut with #10 x 1 Pancake Head Driller Pop Rivet. Use two fasteners per 10' piece.

Lay 1 x ³/₃₂" Tape Sealer across the top of the trim.

Install double faced tape along the length of the Eave Strut.

TRIM LAPS

Counterflash or offset counterflash. Apply two beads of tube caulking between the trim pieces, approximately 2½" from the end of the bottom piece.

OPTION A

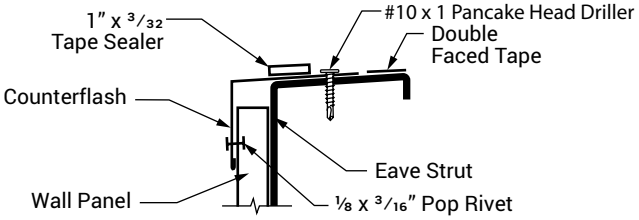

WALL PANEL INSTALLED BEFORE ROOF

OPTION B

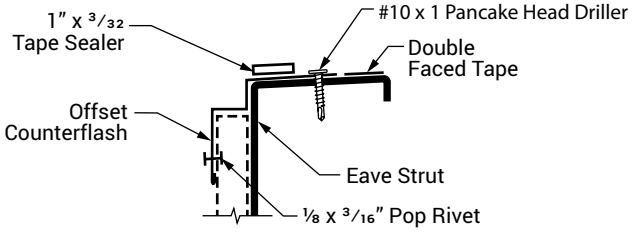

WALL PANEL INSTALLED AFTER ROOF

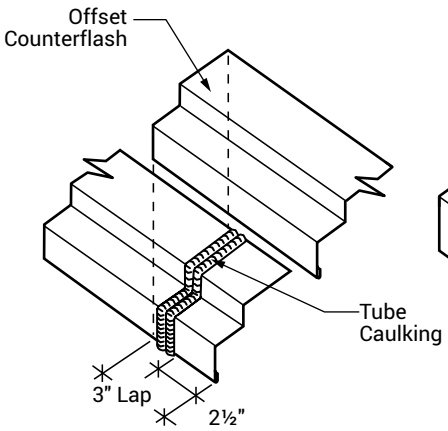

OFFSET COUNTERFLASH
TRIM ENDLAP DETAIL

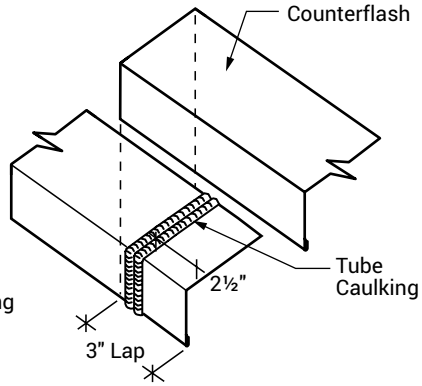

STANDARD COUNTERFLASH
ENDLAP DETAIL

If the top elevation of the eave member is adjusted by 1" this step is not required.

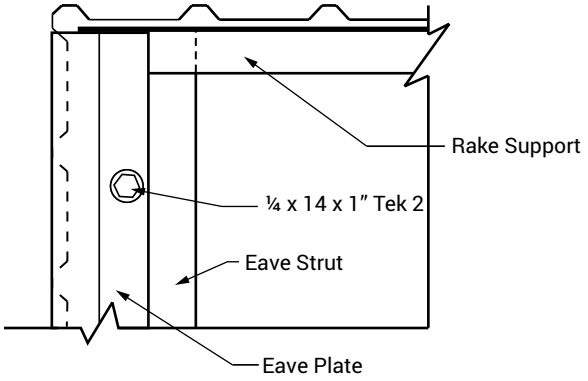

OPTION A

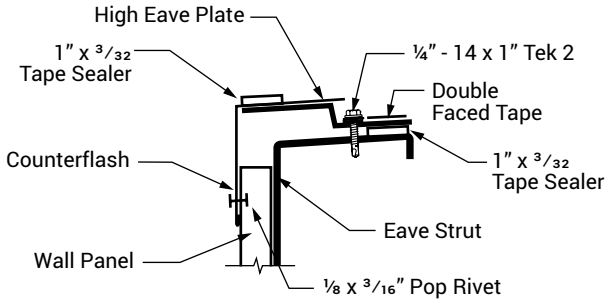

WALL PANEL INSTALLED BEFORE ROOF

OPTION B

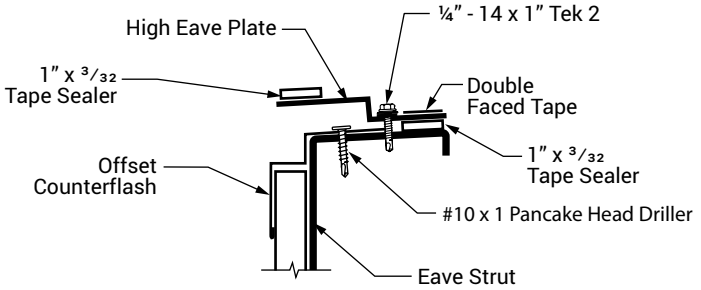

WALL PANEL INSTALLED AFTER ROOF

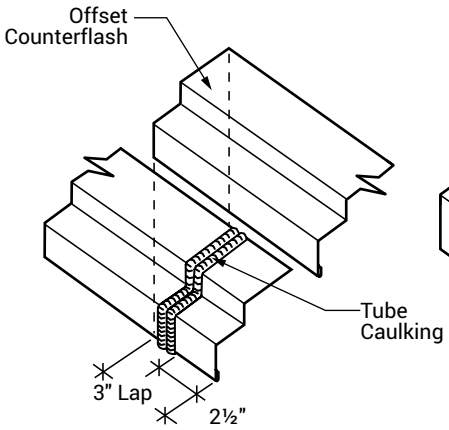

OFFSET COUNTERFLASH TRIM ENDLAP DETAIL

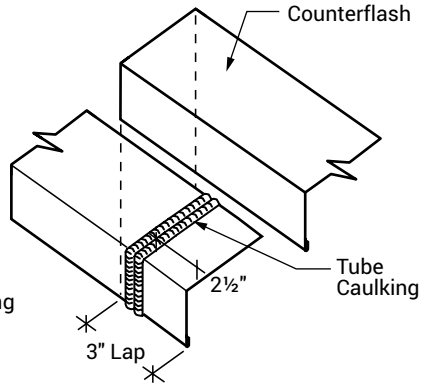

STANDARD COUNTERFLASH ENDLAP DETAIL

STEP 2 HIGH SYSTEM EAVE

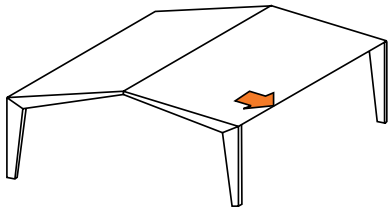

A. WALL PANEL INSTALLED BEFORE ROOF

Install high eave plates flush with the outside of the counterflash. Install ¼" - 14 x 1" Tek 2 (12" on center) in the eave plate. The first eave plate will butt against the rake support. You may install all of the eave plates at this time.

Install counterflash by attaching to wall panel with ⅛ x 3/16" Pop Rivet. Use three fasteners per 10' piece.

Lay 1 x 3/32" Tape Sealer across the top of the Counter flash, flush with the outside edge. Install double faced tape along the length of the bottom leg of the eave plate

B. WALL PANEL INSTALLED AFTER ROOF

Install offset counterflash to eave strut with #10 x 1 Pancake Head driller. Use two fasteners per 10' piece.

Install high eave plates flush with the outside of the counterflash. Install ¼" - 14 x 1" Tek 2 (12" on center) in the eave plate. The first eave plate will butt against the rake support. You may install all of the eave plates at this time.

Lay 1 x 3/32" Tape Sealer across the top of the eave plates, flush with the outside edge. Install double faced tape along the length of the bottom leg of the eave plate.

TRIM LAPS

Counterflash or offset counterflash. Apply two beads of tube caulking between the trim pieces, approximately 2½" from the end of the bottom piece.

STEP 3 FIRST PANEL LOW SYSTEM

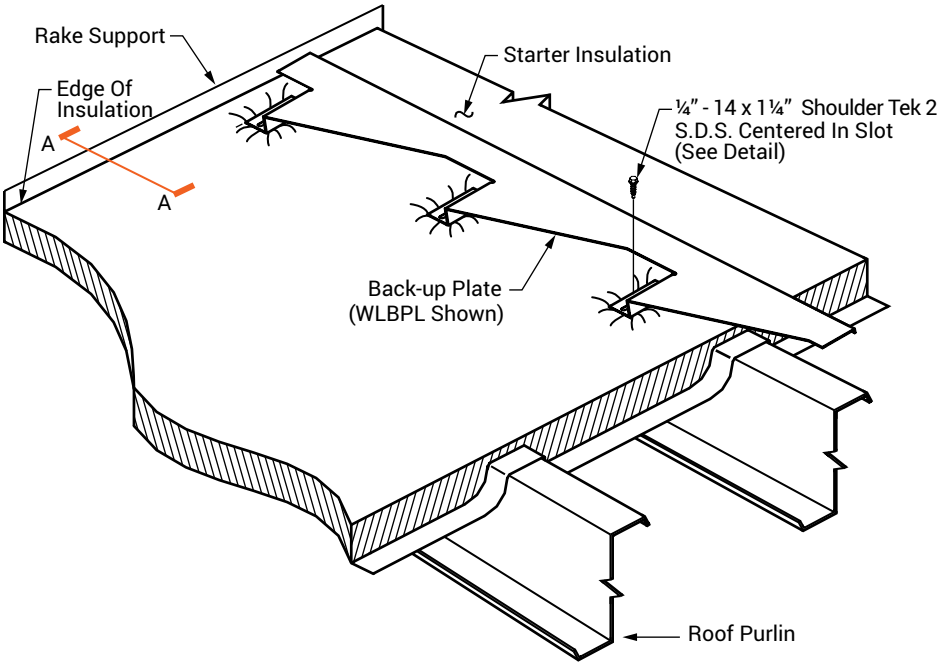

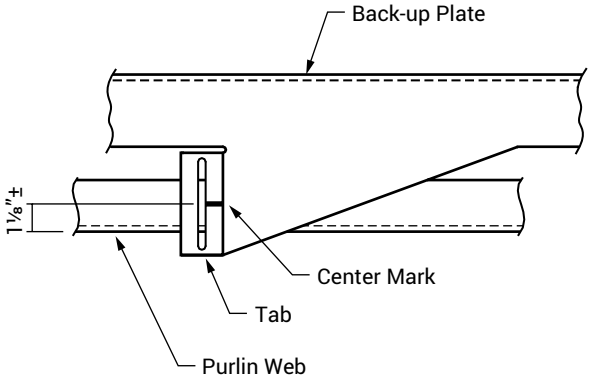

SECTION A-A

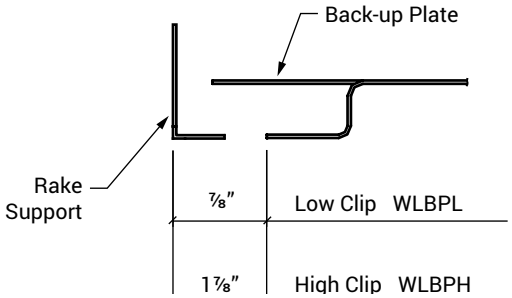

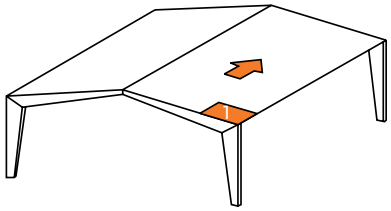

1. The back-up plate must be installed before the first panel if a panel end lap will be required.
2. Locate the first back-up plate as shown in the detail.
3. The back-up plate is located over the blanket insulation.
4. The back-up plate is installed using (one) ¼" - 14 x 1 ¼" Shoulder Tek 2 S.D.S. at each tab.
5. The fastener must be located in the center of the slot to allow for maximum movement. (See detail).
6. Thermal spacers, if required, are not required at the purlin line with the back-up plate.

STEP 4 FIRST PANEL LOW SYSTEM

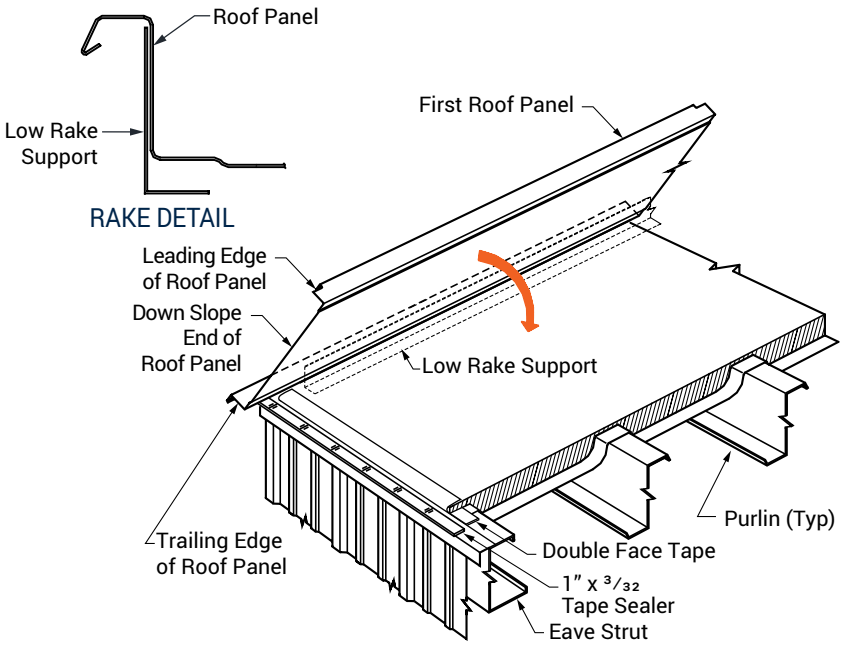

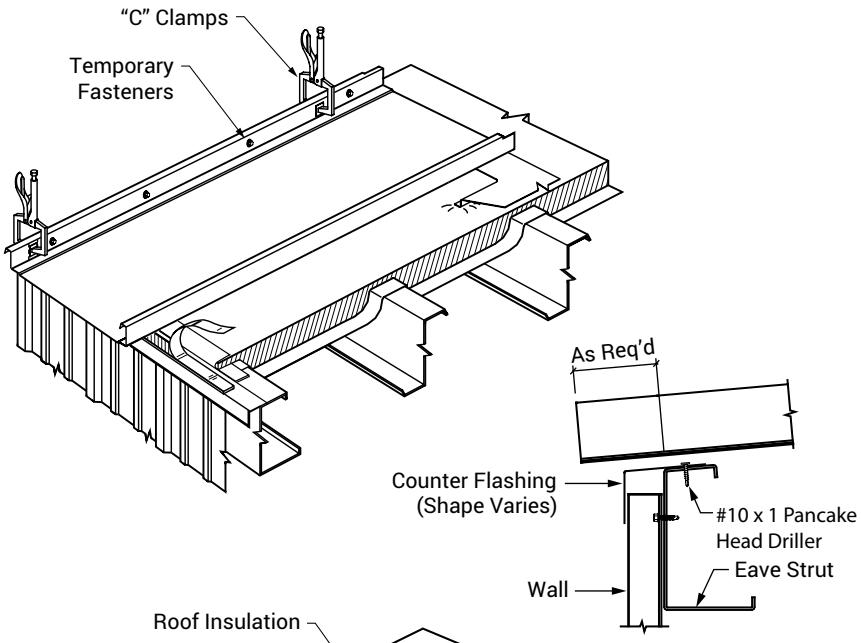

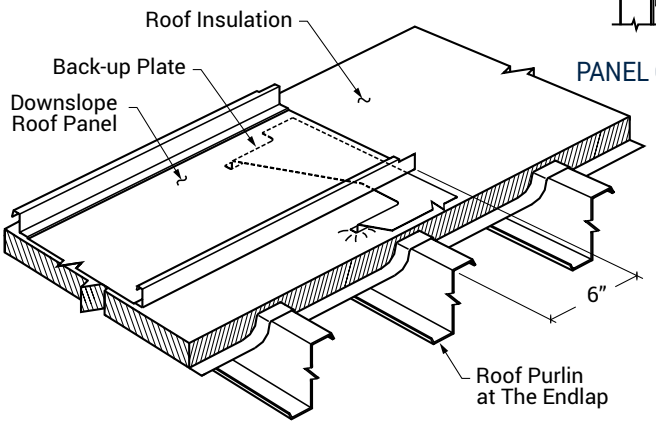

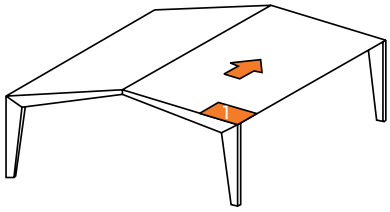

1. The Rake support will establish the desired longitudinal position of the first panel.
2. Hook the female end over the rake support and rotate the panel in place.
3. The vertical leg must be tight to the rake support angle. Secure the vertical leg to the rake support angle with clamps or temporary fasteners.
4. Do no peel paper backing from the tape seal until the panel overhang is verified at both panel ends.
5. The first panel overhang must be set by field measurement.
6. Position the panel so the down slope end matches the required dimension shown on the erection drawings.

CRITICAL!
The overhang dimension is very critical as it establishes the locations of endlaps and ridge cap attachment points.

CAUTION
The Panel must not overhang the upslope edge of the back up plate more than ½".

1. Before attaching the roof panel to the eave, measure the panel overhang at the purlin at the up slope panel end.
2. **The panel must extend 6" from the purlin web to the end of the panel.**

CRITICAL!
If the panel overhang is not within these ranges, call Whirlwind Steel Buildings before proceeding with the installation of the roof panels.

STEP 5 FIRST PANEL HIGH SYSTEM

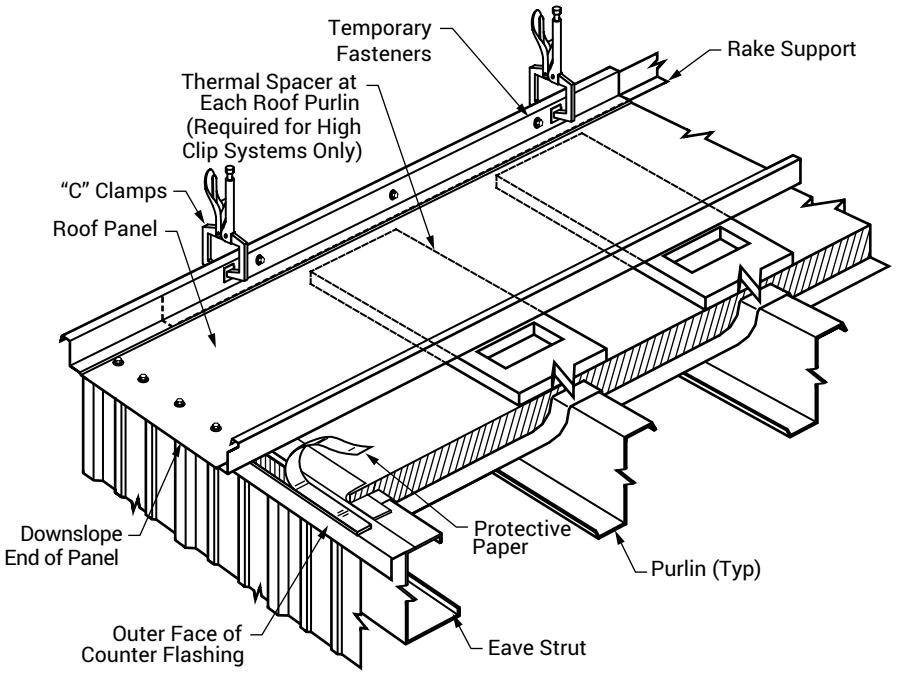

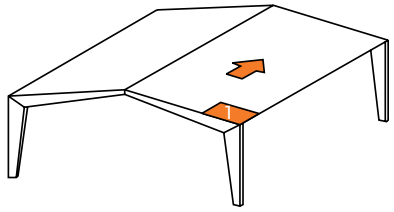

1. If thermal spacers are required, locate one at each purlin (except where back-up plate is required) underneath the panel. Since the panel clip is located in a hole in the thermal spacer, these spacers must be installed as the roof system is installed. Note that the panel clip for every third panel is located between the thermal spacers.

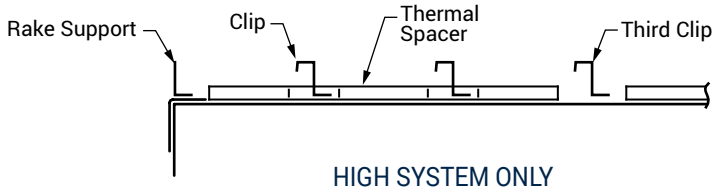

HIGH SYSTEM ONLY

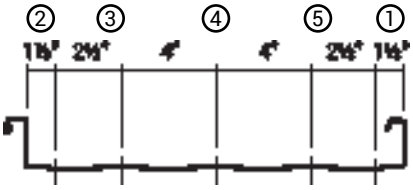

PANEL-EAVE FASTENERS

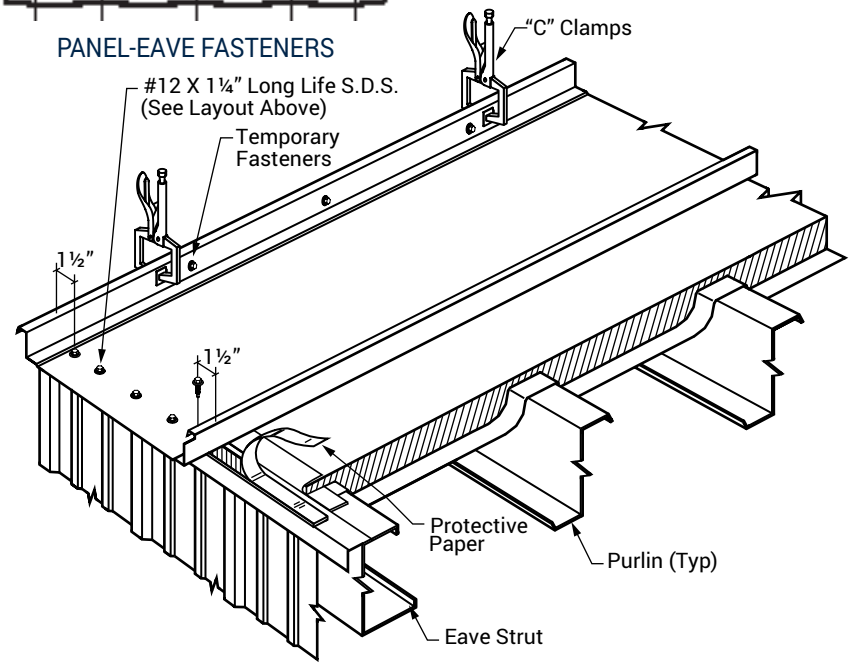

1. Peel the paper backing from the tape seal as shown, removing just enough for the panel being installed.
2. Install the fasteners through the panel at the eave in the proper sequence locating the fasteners so they fasten into the eave member and install.
3. Space the fasteners as shown in the detail.

STEP 6 FIRST PANEL ENDLAP

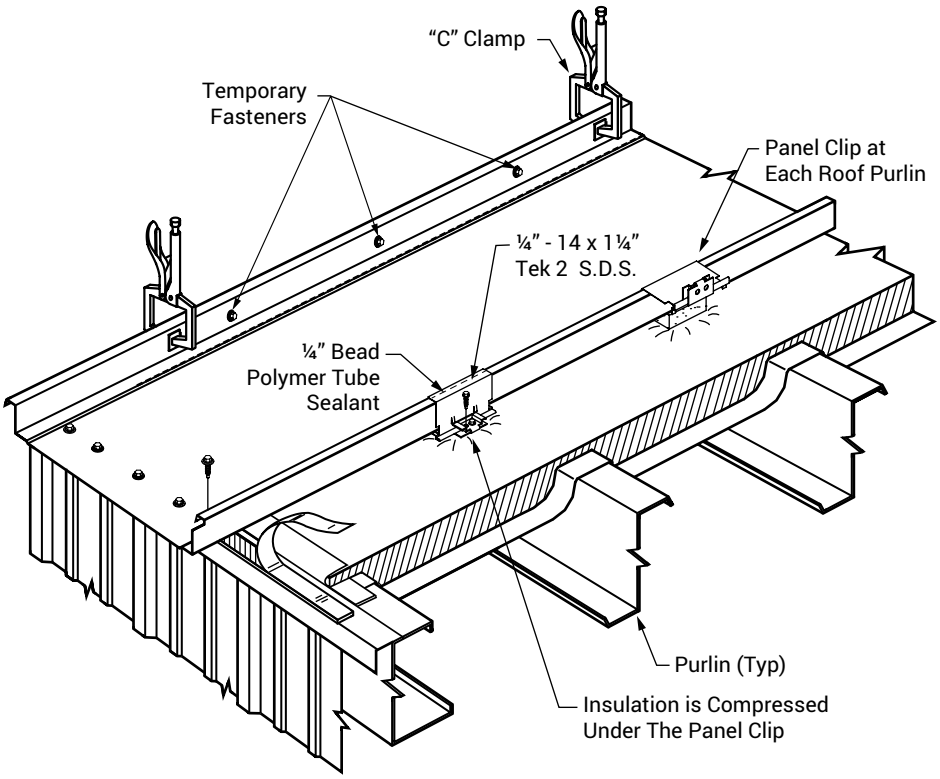

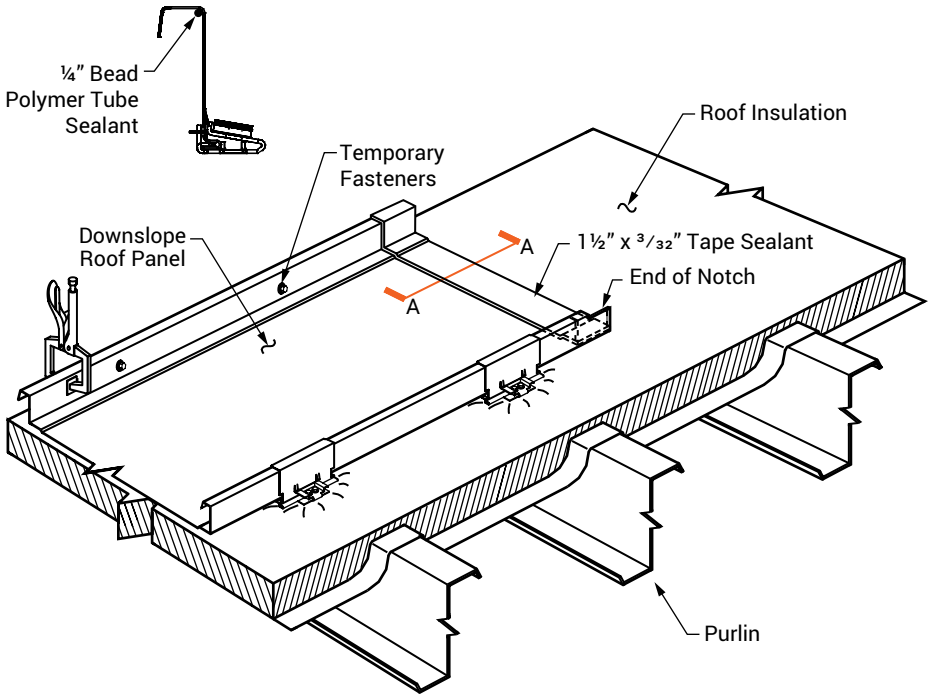

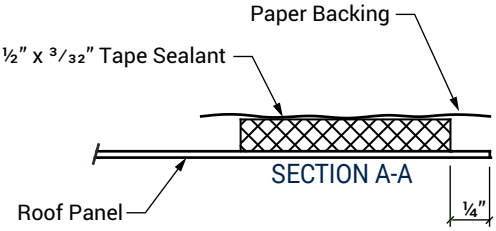

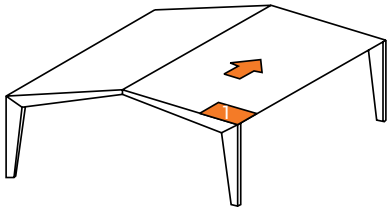

1. Make sure the panel overhangs have been verified, the thermal spacers installed (if required), and the panel is fastened to the eave before installing the panel clips.
2. Make sure the polymer sealant has been applied to the clip before installing.
3. Hook the male leg of the clip over the top of the panel leg and rotate in place as shown in the above detail, making sure the clip is located directly over a purlin.
4. Attach the clip with (2) ¼" - 14 x 1¼" Tek 2 S.D.S.
5. Make sure there is a clip located at every purlin before installing the next panel.
6. The proper placement of the tape seal is critical to the water resistance of the roof endlaps.
7. The tape seal is 1½" wide, with the edge being placed ¼" from the upslope end of the lower roof panel.
8. Refer to the following page for additional details regarding the placement of the tape seal.

STEP 7 ENDLAP PANEL

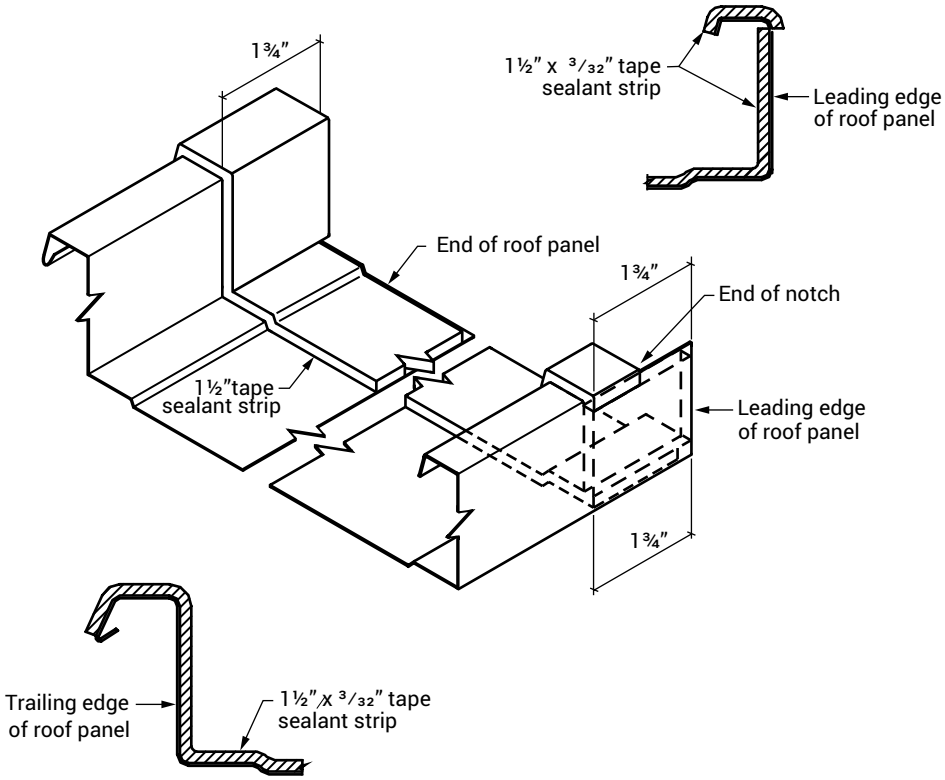

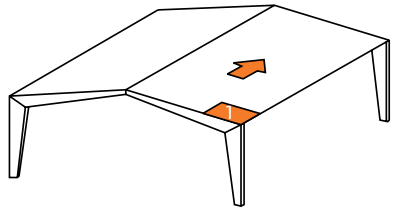

1. Place the 1½" x 3/32" endlap tape seal as shown in the above illustrations. Make sure the tape seal is pressed tightly into the panel bends and corners.

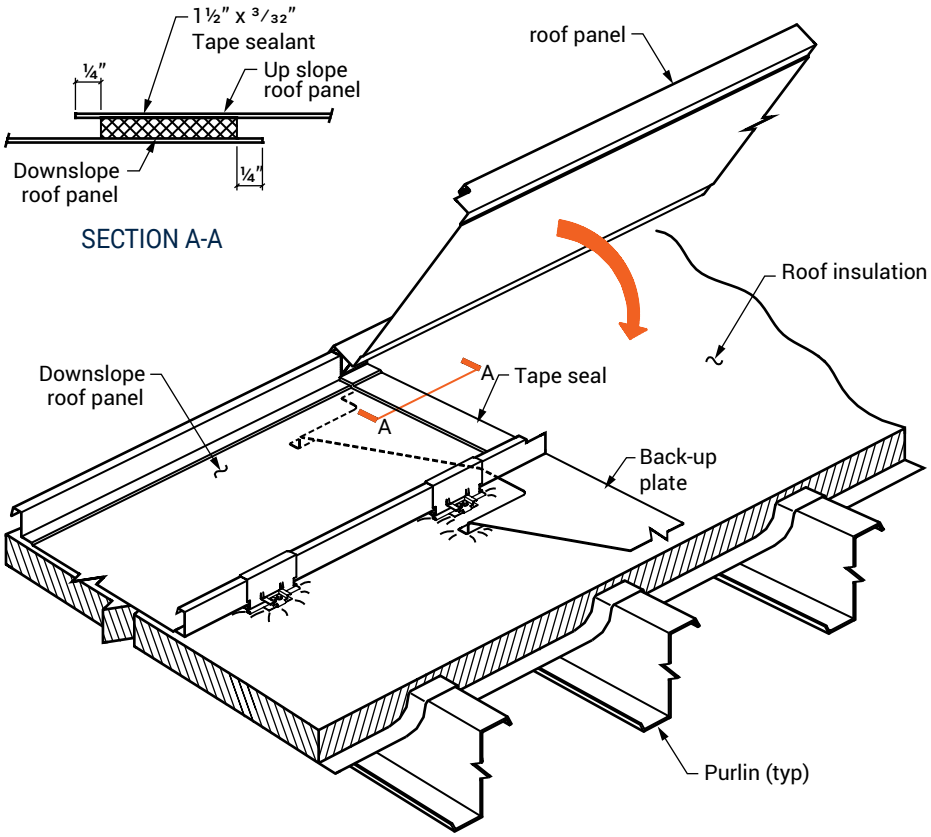

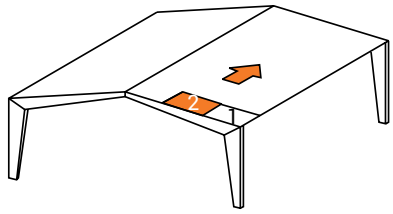

2. Position the up slope panel so the total panel lap is 2".
3. The endlap tape seal and the lower edge of the upslope panel are positioned so their edges are ¼" apart. (See Section A-A)
4. When placing the up slope panel care must be taken to prevent moving or wiping the tape seal from the down slope panel.

STEP 8 UP SLOPE PANEL

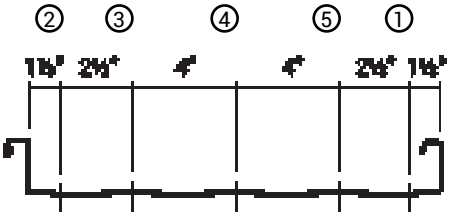

PANEL - ENDLAP FASTENERS

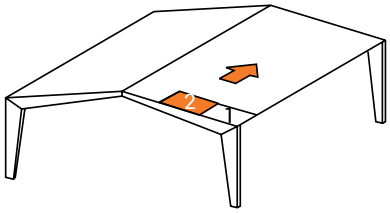

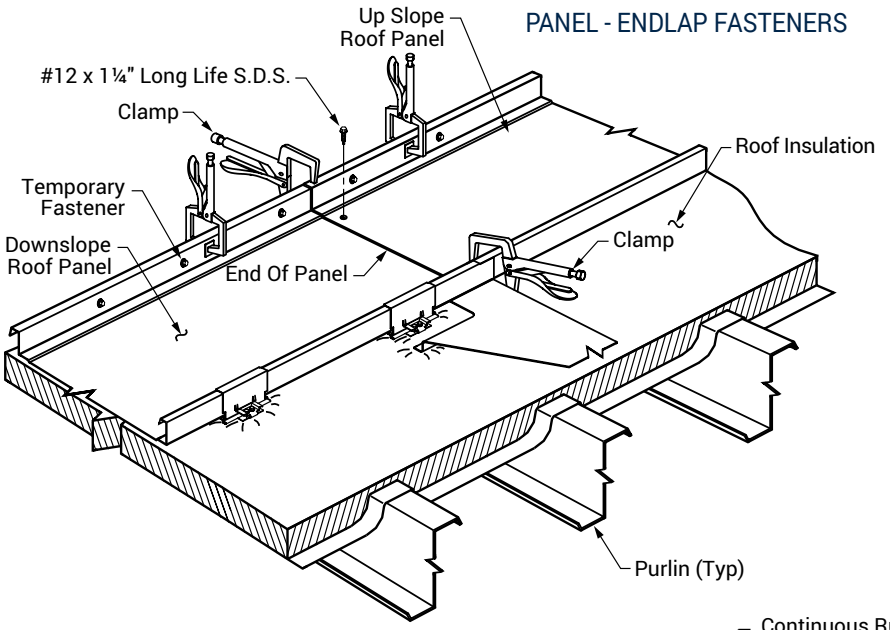

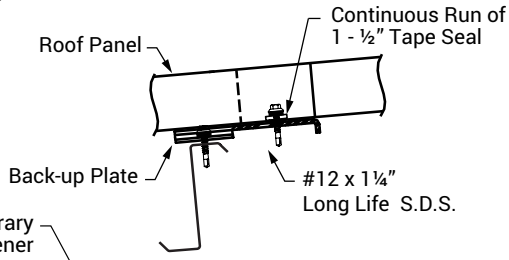

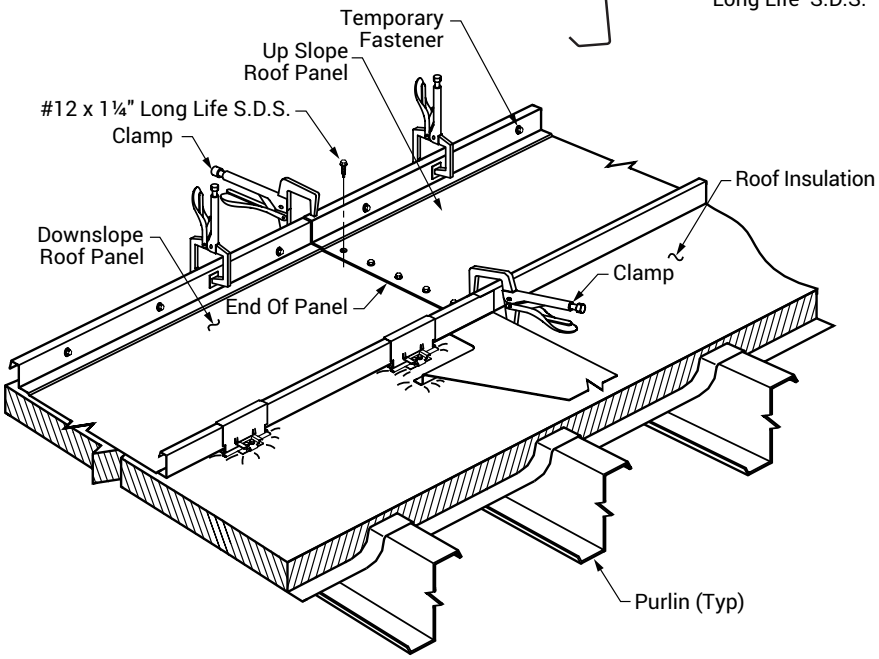

1. "C" Clamps should be used to hold the sides of the panels to the backup plate as shown.
2. The vertical leg must be tight to the rake support angle. Secure the vertical leg to the rake support angle with clamps or temporary fasteners.
3. Install the fasteners in the proper sequence as illustrated.
4. Repeat the endlap procedures as required for each panel until the ridge or the high eave is reached.

CRITICAL!
It is critical that fasteners attach through the lapped ends of the panels, Tape Seal and the back up plate.

STEP 9 SECOND PANEL RUN

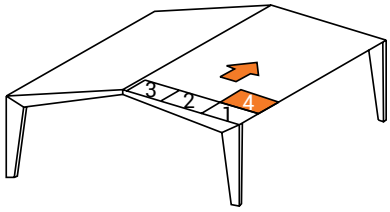

1. Remove enough of the protective paper from the tape seal at the eave for one panel.
2. Lay two 3/16" beads of caulking approximately ½" apart along the vertical leg and along the base of the leading edge of the first panel.

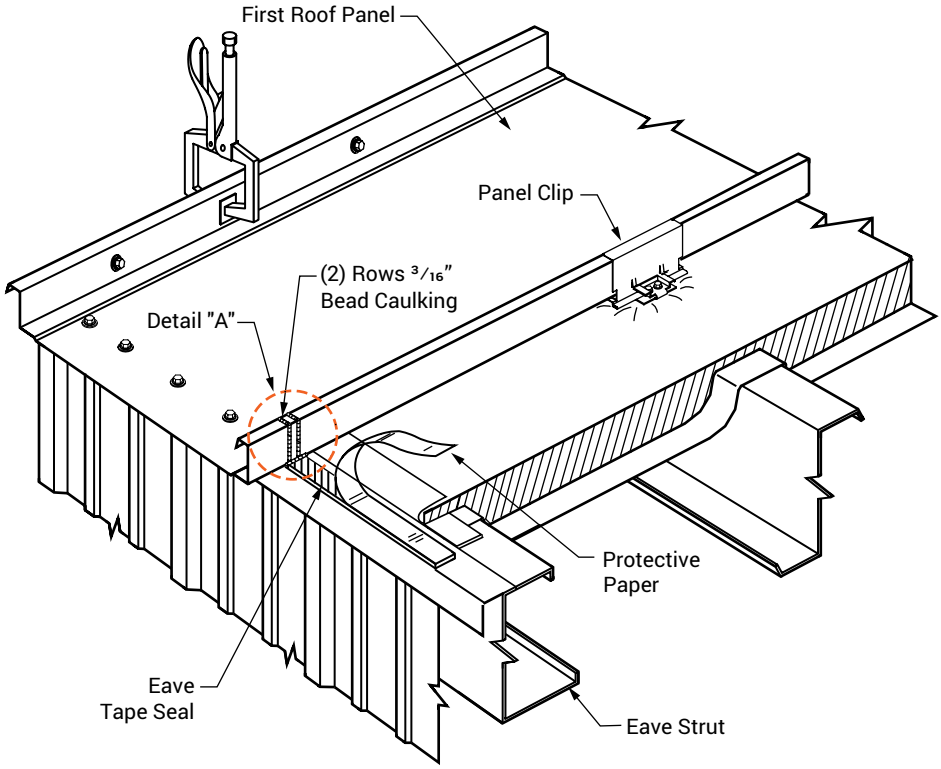

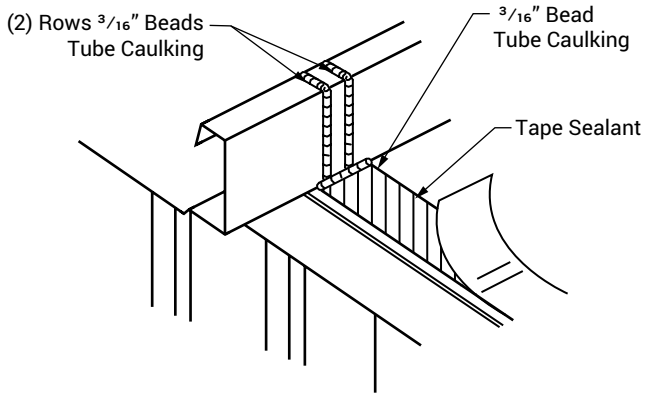

DETAIL "A"

STEP 10 SECOND PANEL RUN

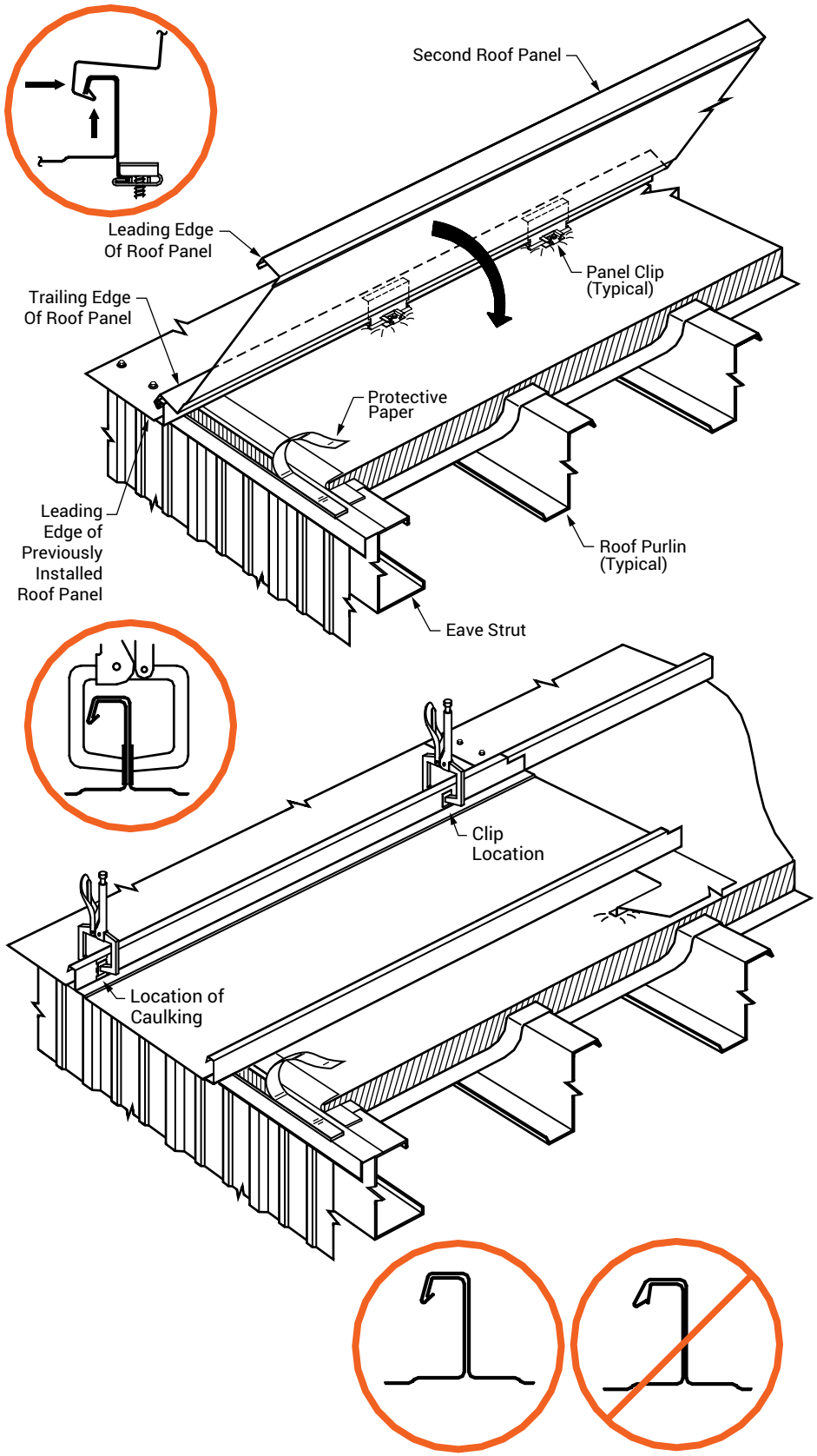

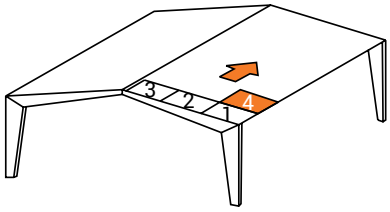

1. Peel the paper backing from the tape seal as shown, removing just enough for the panel being installed.
2. Position the panel so the eave end is flush with the previously installed panel.
3. Position the panel so the vertical leg of the female side is resting on the horizontal portion of the previous panel's male leg.
4. Push the top of the female leg in tight against the male leg.
5. Lift up on the panel so the hook portion of the female leg is hooked into the end of the male leg.
6. Rotate the panel into place as shown.
7. After the panel has been rotated in place verify that the female leg has engaged the male leg along the entire length of the panel.
8. Place "C" clamps over the vertical legs of the panels at the eave where the two beads of caulking were previously placed and at the up slope end at a clip location.
9. The "C" clamps ensure the vertical legs of the panels are vertical and the panel module is maintained.
10. Leave "C: clamps in place until all clips and fasteners are installed.

STEP11 SECOND PANEL RUN

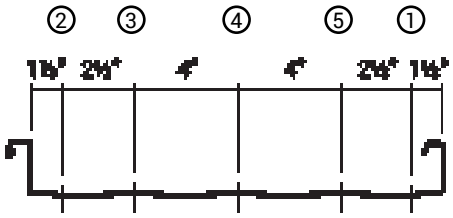

PANEL-EAVE FASTENERS

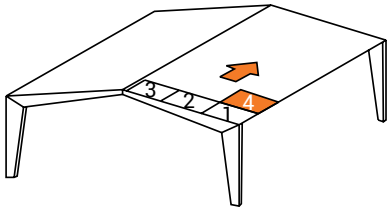

1. Install the fasteners through the panel at the eave, locating the fasteners so they fasten into the eave member.
2. Space the fasteners as shown in the detail above. Install in proper sequence.
3. Continue with the thermal spacer (if required) and clip installation as previously described.

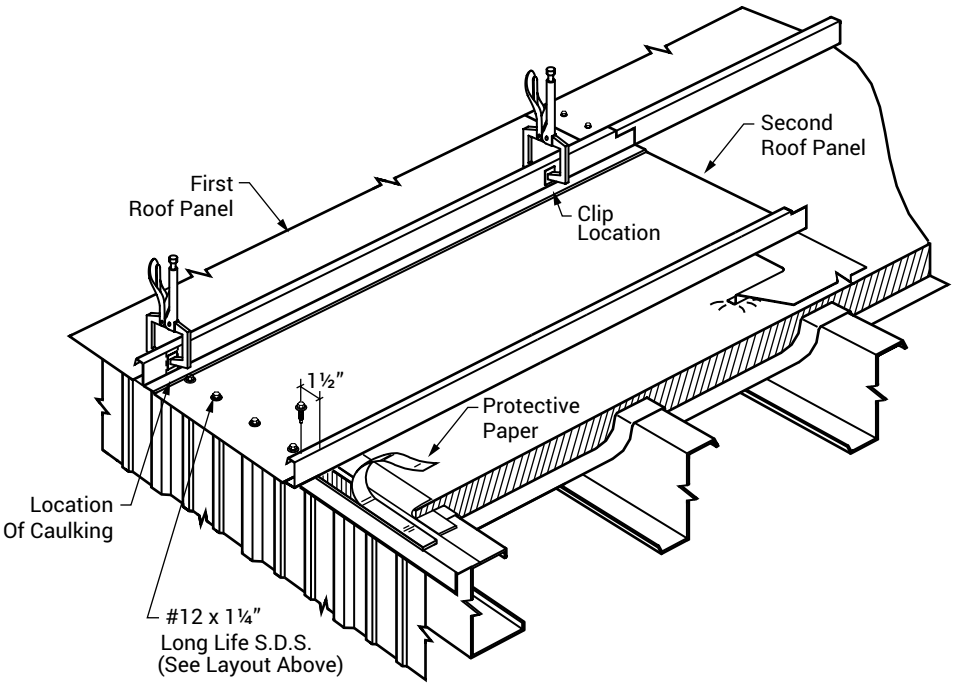

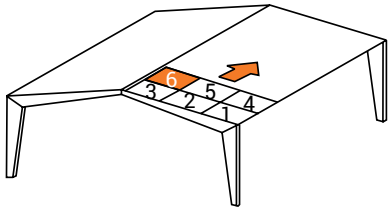

1. If the panels have not been seamed prior to the installation of the end dams use a hand crimper to seam the panels at least twenty-four inches (24") down slope from the panel end.

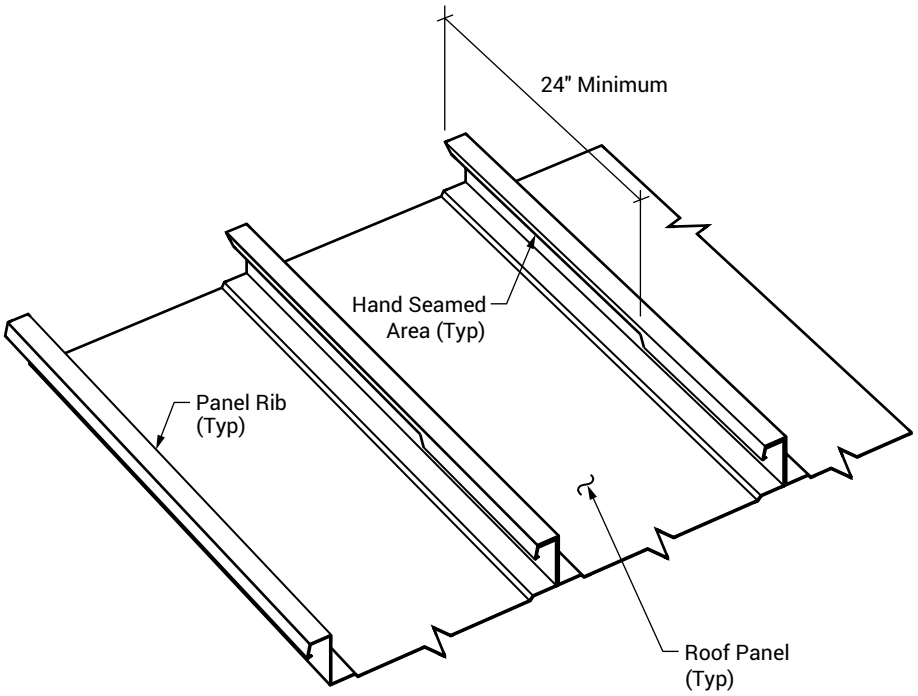

STEP 12 END DAM

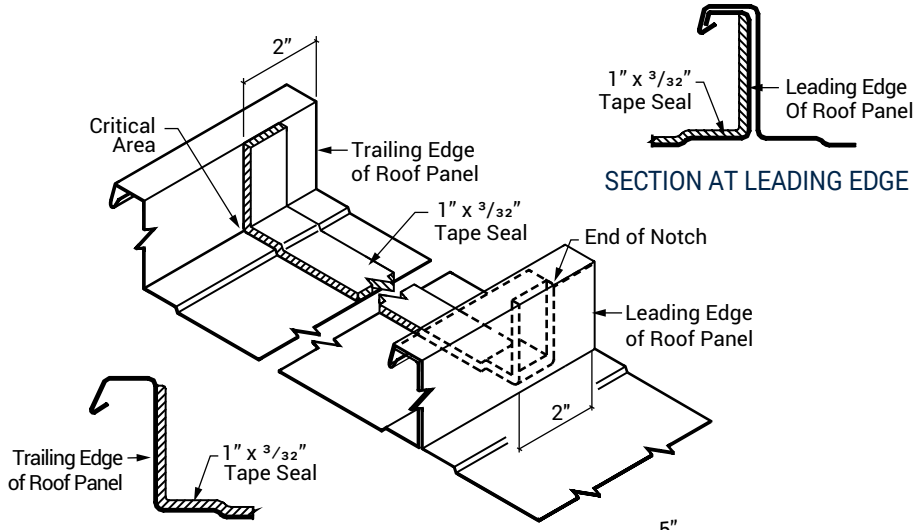

SECTION AT LEADING EDGE

SECTION AT TRAILING EDGE

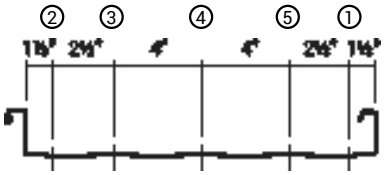

END DAM FASTENER LAYOUT
(Use prepunched holes)

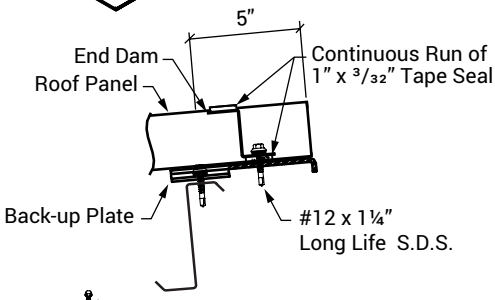

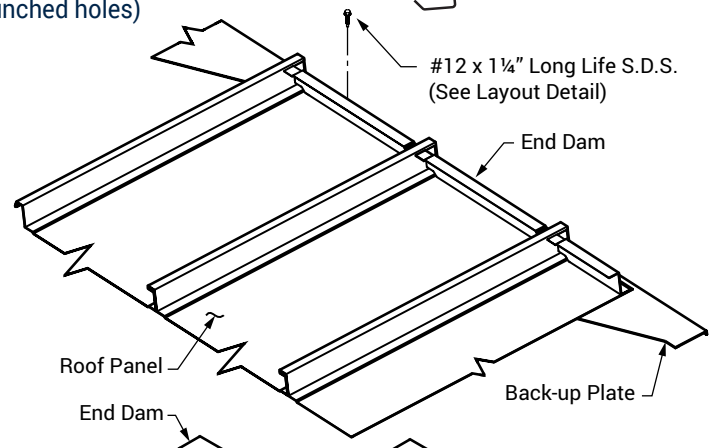

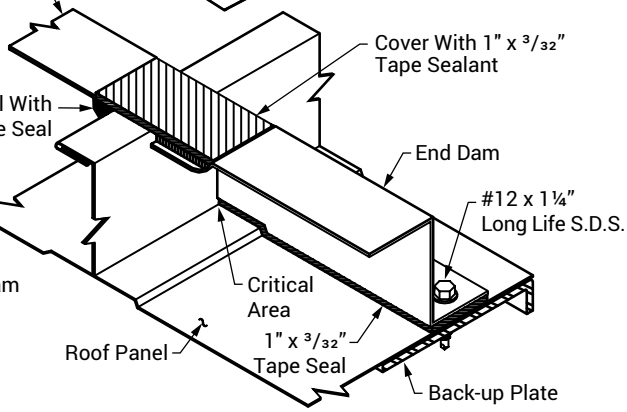

SEE NOTE 6

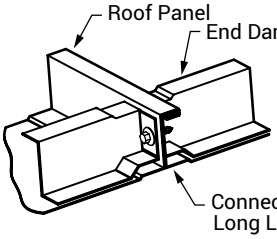

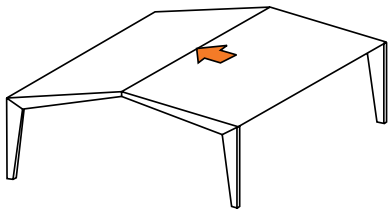

1. Make sure the tape seal is pressed tightly into the panel bends and corners. Per the illustration.
2. Make sure the back-up plates have been installed.
3. Attach the end dam to the panel and back-up plate with five (5) #12 x 1¼" Long Life S.D.S through the prepunched holes in the end dam.
4. Fill the indented area of the end dam at the vertical rib with 1" x 3/32" tape seal as shown.
5. Connect the end dams together at every high rib with (one) ¼" - 14 x ⅞" Long Life Lap Tek.
6. Hand Crimp the upslope end of the panels and install the end dam as each panel run is installed. "C" clamp the end dam tabs together before installing the horizontal fastener.

STEP 13 LAST PANEL RUN

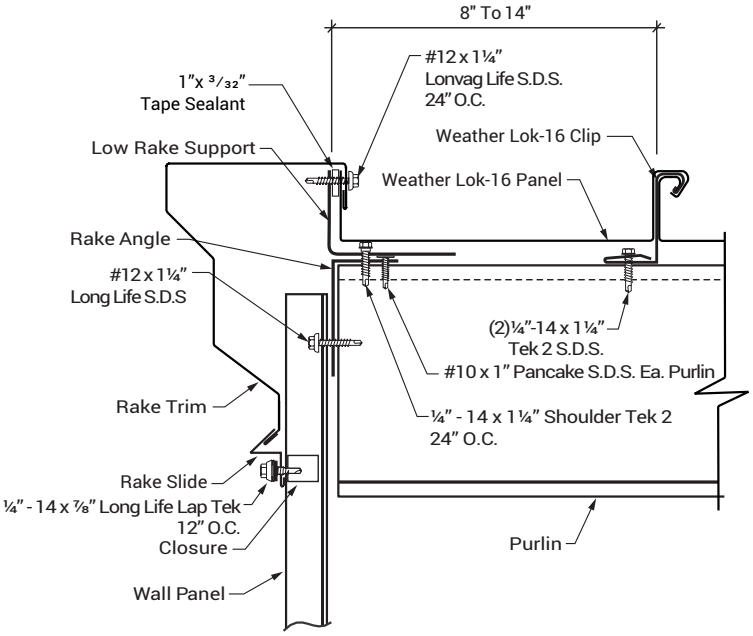

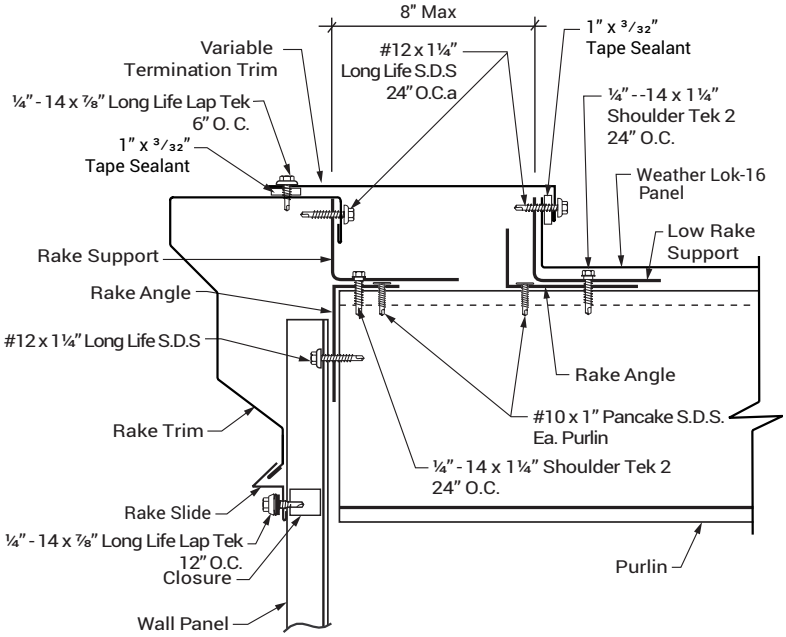

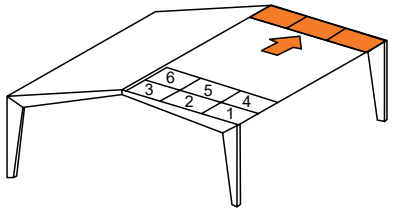

Install rake support at the finishing end of the roof as outlined in Step 1.

FINISHING DIMENSION RUN OF 8" TO 14"

Field cut and bend a 2" tall vertical leg on the panels in the last run of roof. The vertical leg must be tight to the rake support angle. Secure the vertical leg to the rake support angle with clamps or temporary fasteners. At the endlap and ridge, a partial back-up plate must be cut.

FINISHING DIMENSION RUN OF LESS THAN 8"

If the width of the last panel run is 8" or less, a second run of rake support angle must be installed for attachment of the vertical leg of the panel. A variable termination trim will be required to seal the gap between the vertical leg of the panel and the rake trim.

The male leg of the panel and the termination trim must be field cut to fit the condition.

RIDGE CAP INSTALLATION

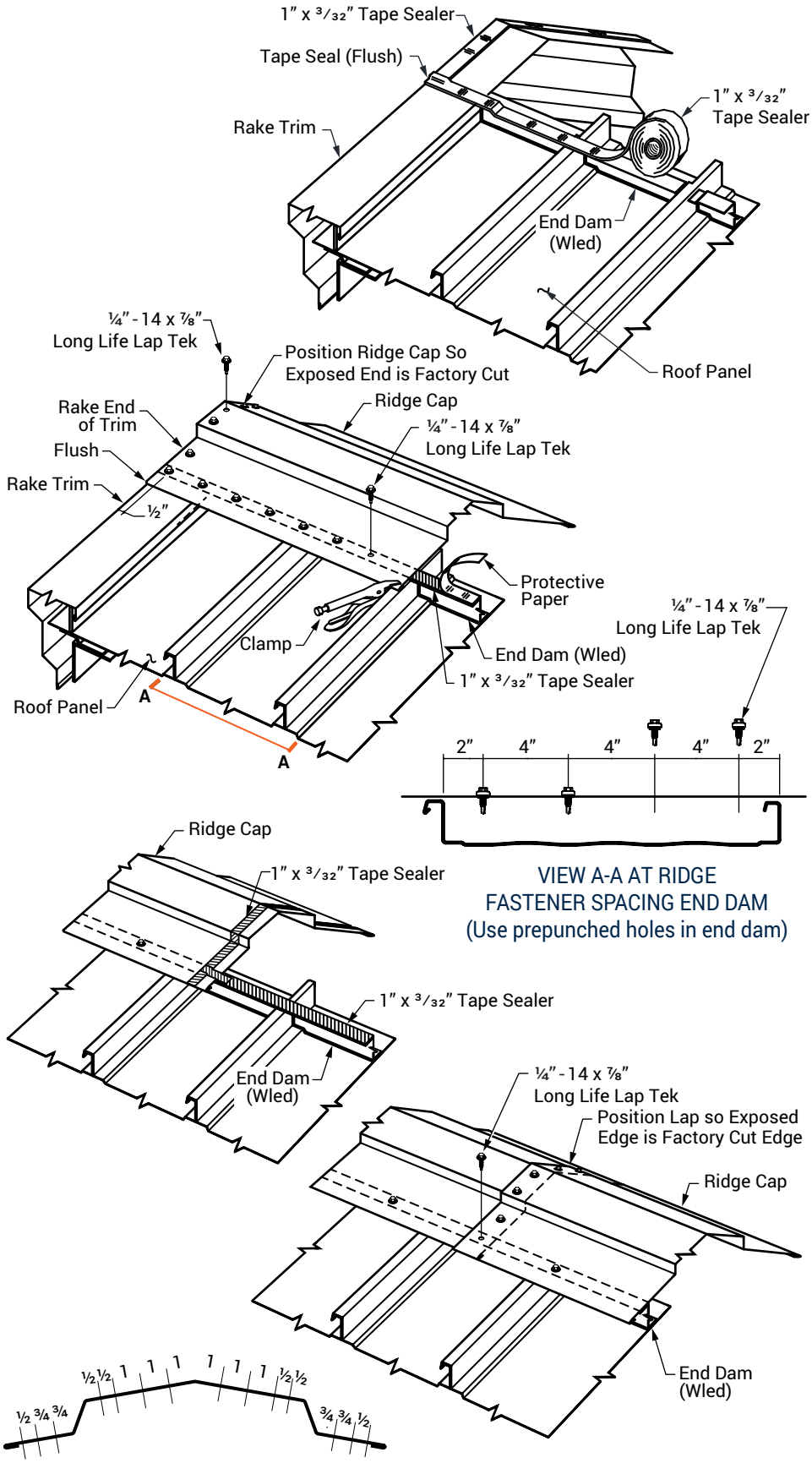

1. Place a continuous strip of 1" x 3/32" tape seal along the top flange of the end dam and over the ridge as shown in the detail. Set the end of the ridge cap flush with the face of the rake trim.
2. Hold the ridge cap in place using standard vise grips as shown.
3. Attach the ridge cap with ¼" - 14 x ⅞ Long Life Lap Tek. (4 per panel)
4. Use 1" x 3/32" tape seal at ridge cap splice as shown in the details.
5. Use (14) ¼" - 14 x ⅞" Long Life Lap Tek at the ridge cap splice.

GUTTER ATTACHMENT DETAIL

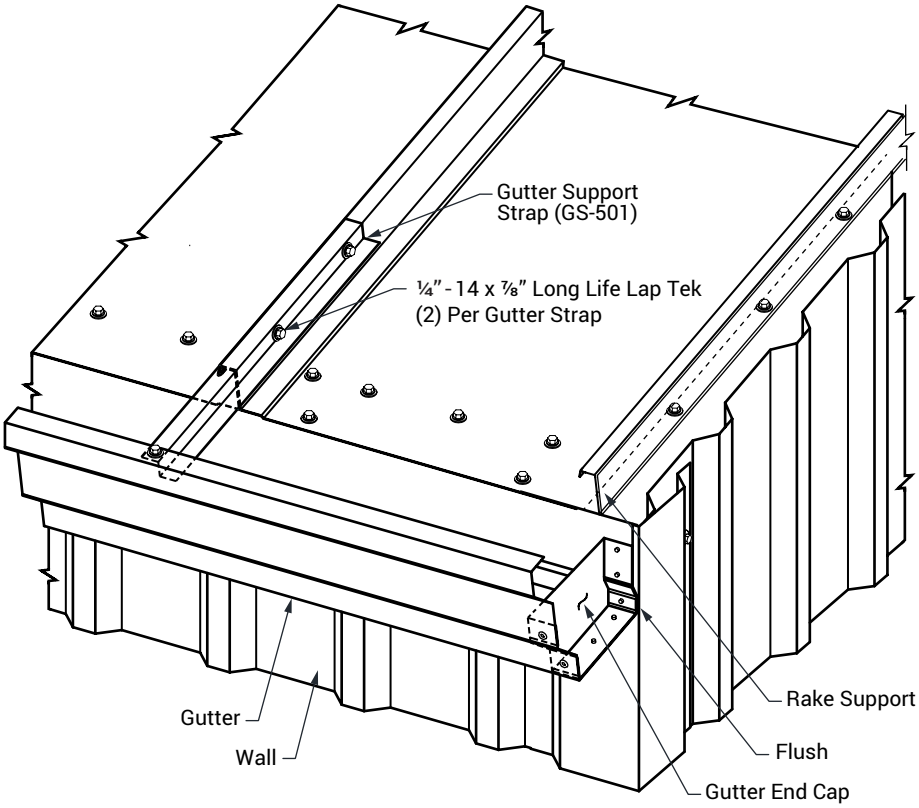

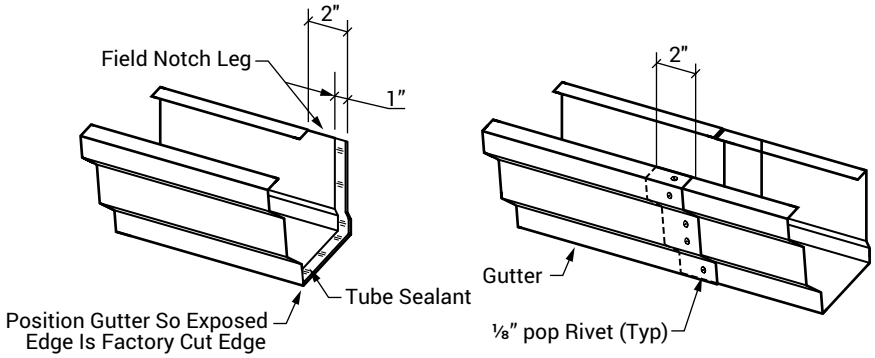

EAVE GUTTER SPLICE

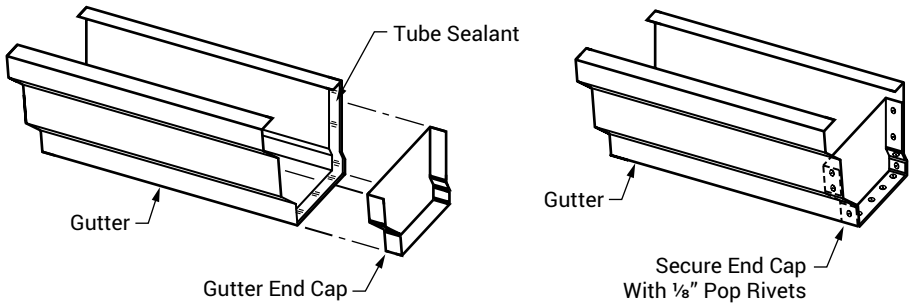

EAVE GUTTER END CAP

1. Make sure the gutter counter flashing is in place before installing the gutter.
2. Position the first section of gutter flush with the outside face of the finished endwall.
3. Attach the gutter to the roof panel with ¼" - 14 x ⅞" Long Life LapTek .
4. Place the tube sealant along the inside face of the gutter before installing the next section.
5. Lap the gutter sections 2" and fasten with ⅛" pop rivets.
6. The GS-501 gutter support straps are located at every other vertical rib unless noted otherwise on the erection drawings.
7. Attach the GS-501 to the roof panel with (2) ¼" - 14 x ⅞" Long Life Lap Tek and to the outside lip of the gutter with (one) ¼" - 14 x ⅞" Long Life Lap Tek.
8. Make sure the end of the last section of gutter is flush with the outside face of the finished endwall.
9. Place the tube sealant along the inside face of the gutter before installing the gutter end cap.
10. Fasten the gutter end cap to the gutter with ⅛" pop rivets.
11. This gutter should not be used in areas that experience snow loads of 20 PSF or higher.

CORNER BOX DETAIL WITH GUTTER

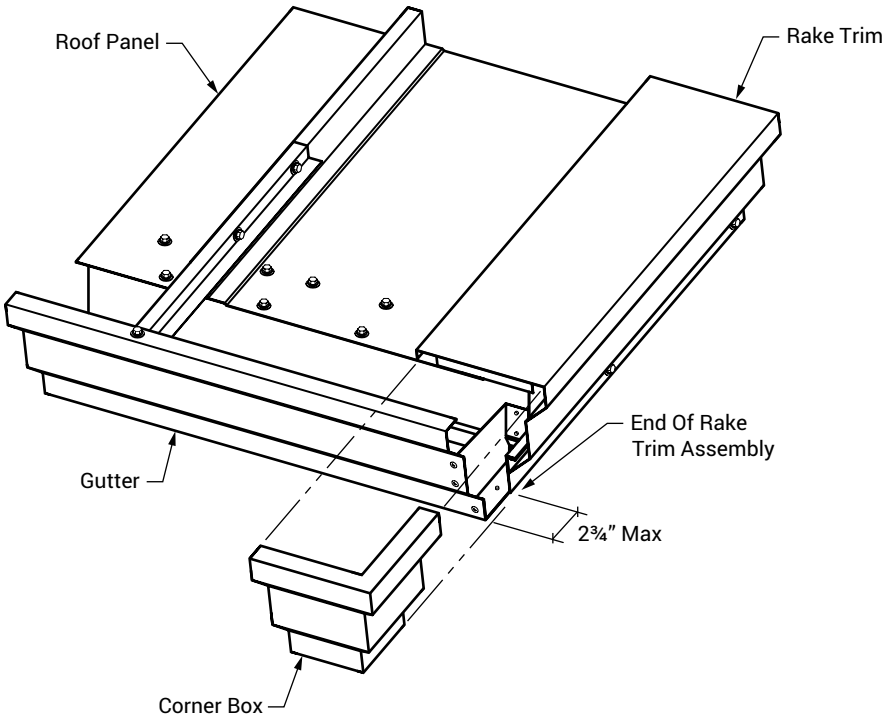

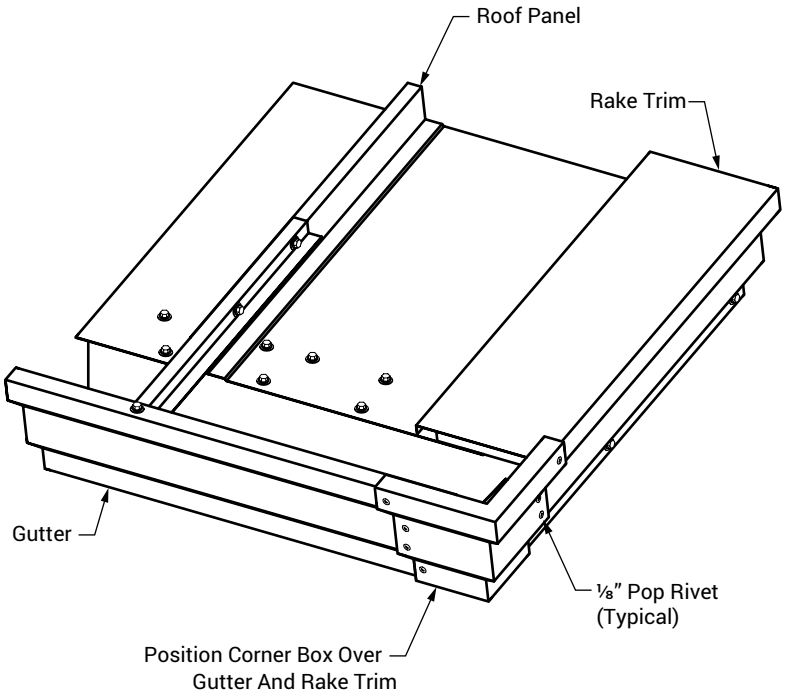

1. Make sure the end of the gutter is flush with the outside face of the wall and the end of the rake trim assembly is no more than 2¾" from the outside edge of the bottom of the gutter.
2. Position the corner box over the end of the gutter and rake trim assembly.
3. Attach the corner box to the gutter and rake trim with ⅛" pop rivets.

CORNER BOX DETAIL WITH EAVE TRIM

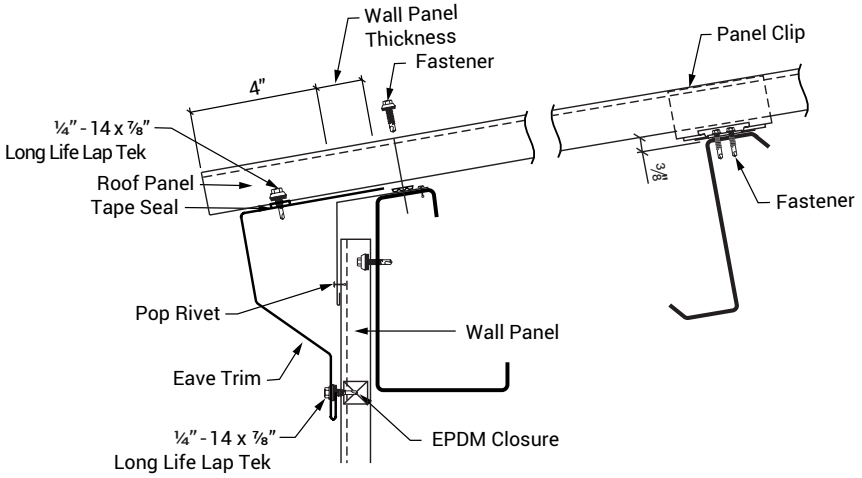

1. Panel overhang at eave is 4" plus wall panels thickness.
2. Attach sculptured eave trim to Weather Lok-16 panel with fastener #14 x ⅞" Long Life LapTek at 1'-4" O.C.
3. Attach bottom of sculptured eave trim to wall panels with fastener #14 x ⅞" Long Life LapTek at each high rib.

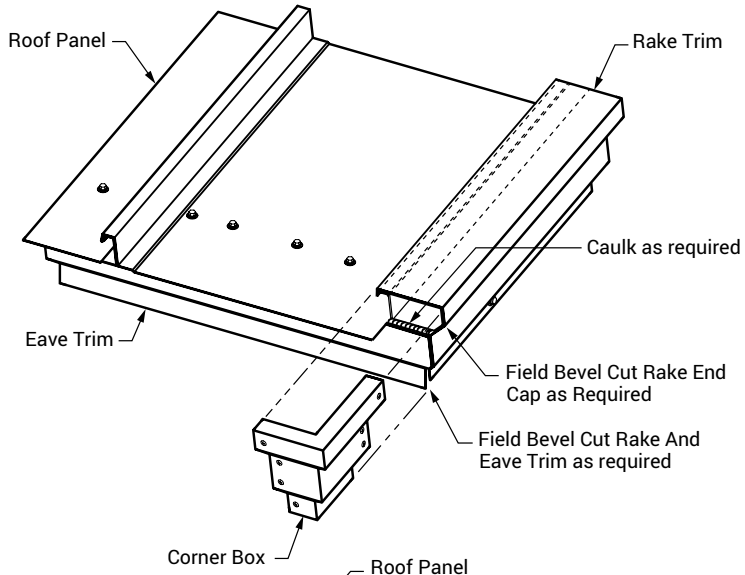

1. Field cut the rake end cap (RT-608) to fit snugly inside the rake trim.
2. Make sure the end of the eave trim is flush with the outside face of the rake trim and the end of the rake trim is flush with the outside edge of the eave trim.
3. Field miter the end of the rake trim and eave trim.
4. Position the corner box over the end of the eave trim and rake trim.
5. Attach the corner box to the eave and rake trim with ⅛" pop rivets.

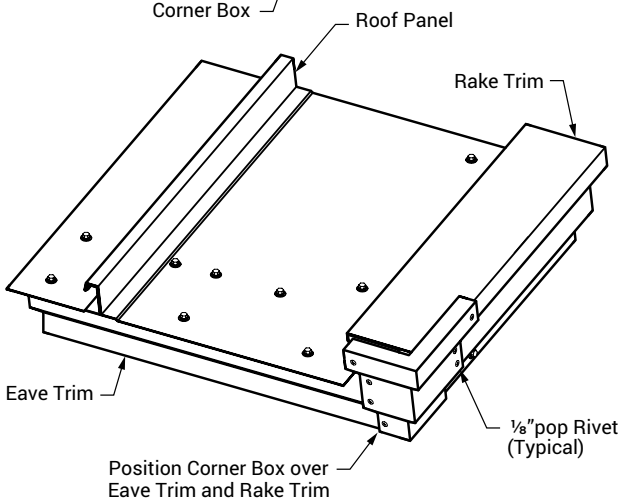

HIGH SIDE EAVE TRIM INSTALLATION

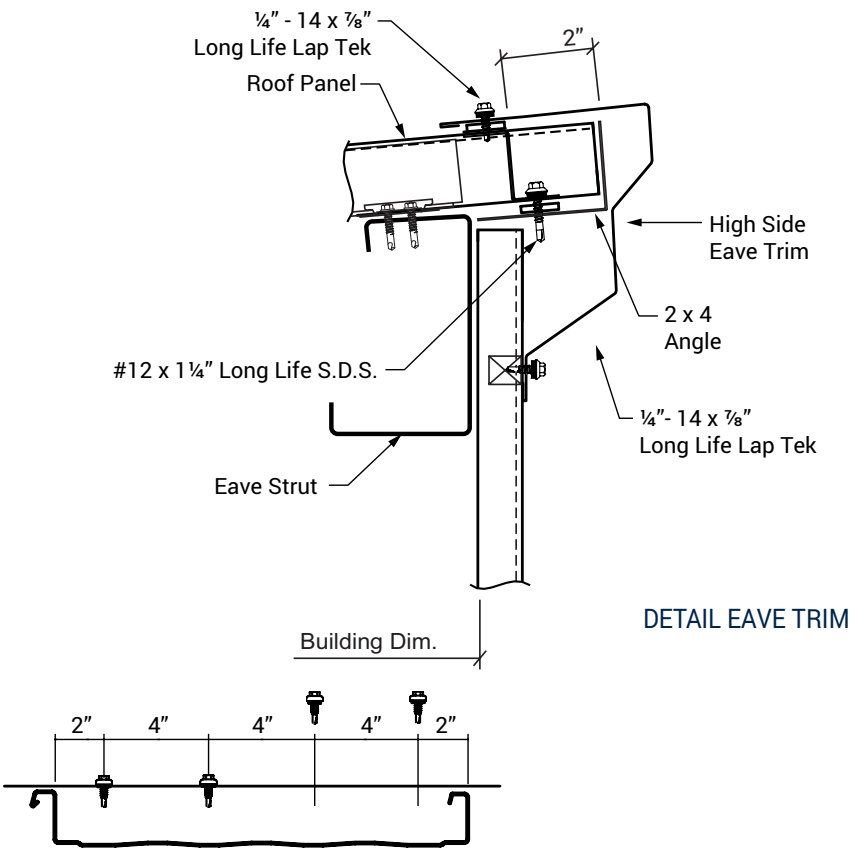

DETAIL EAVE TRIM

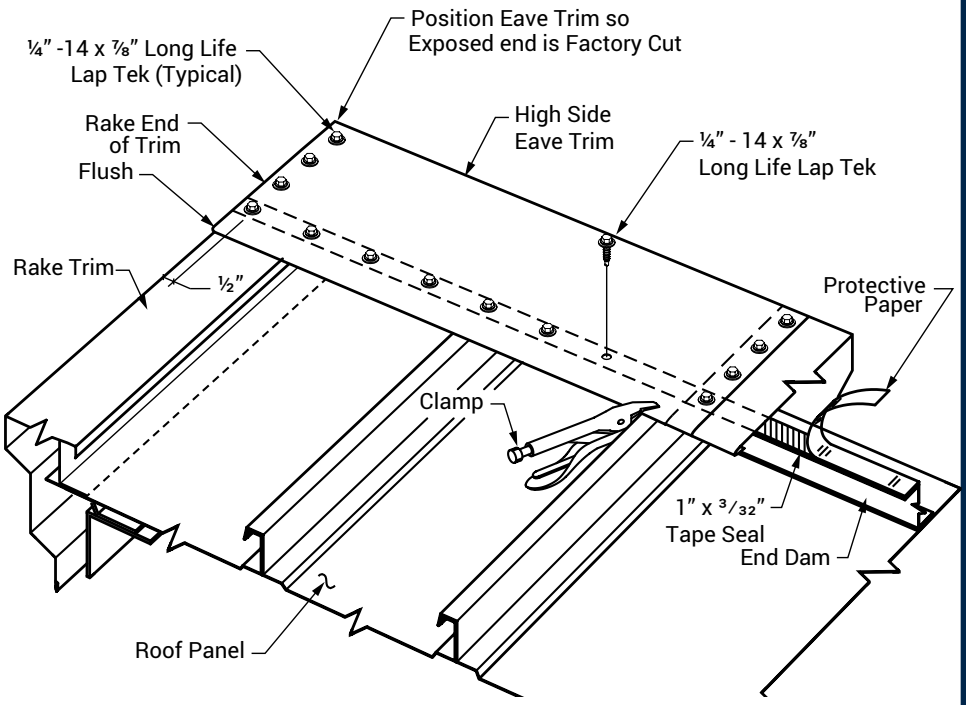

1. "C" Clamp the 2x4 backup angle to the panels.
2. Hand crimp panel 24" Downslope.
3. Install tape seal in the pan of the panel per instructions on page 28.
4. Install end dam with (5) #12x 1¼" Long Life S.D.S. per panel.
5. Remove "C" Clamps.
6. Install eave trim flush with the face of the rake trim.
7. Attach the high side eave trim to the end dam with ¼" -14 x ⅞ Long Life Lap Tek. (4 per panel).
8. Attach the bottom of trim to the wall with the proper fastener.

PARAPET FLOATING HIGH SIDE EAVE

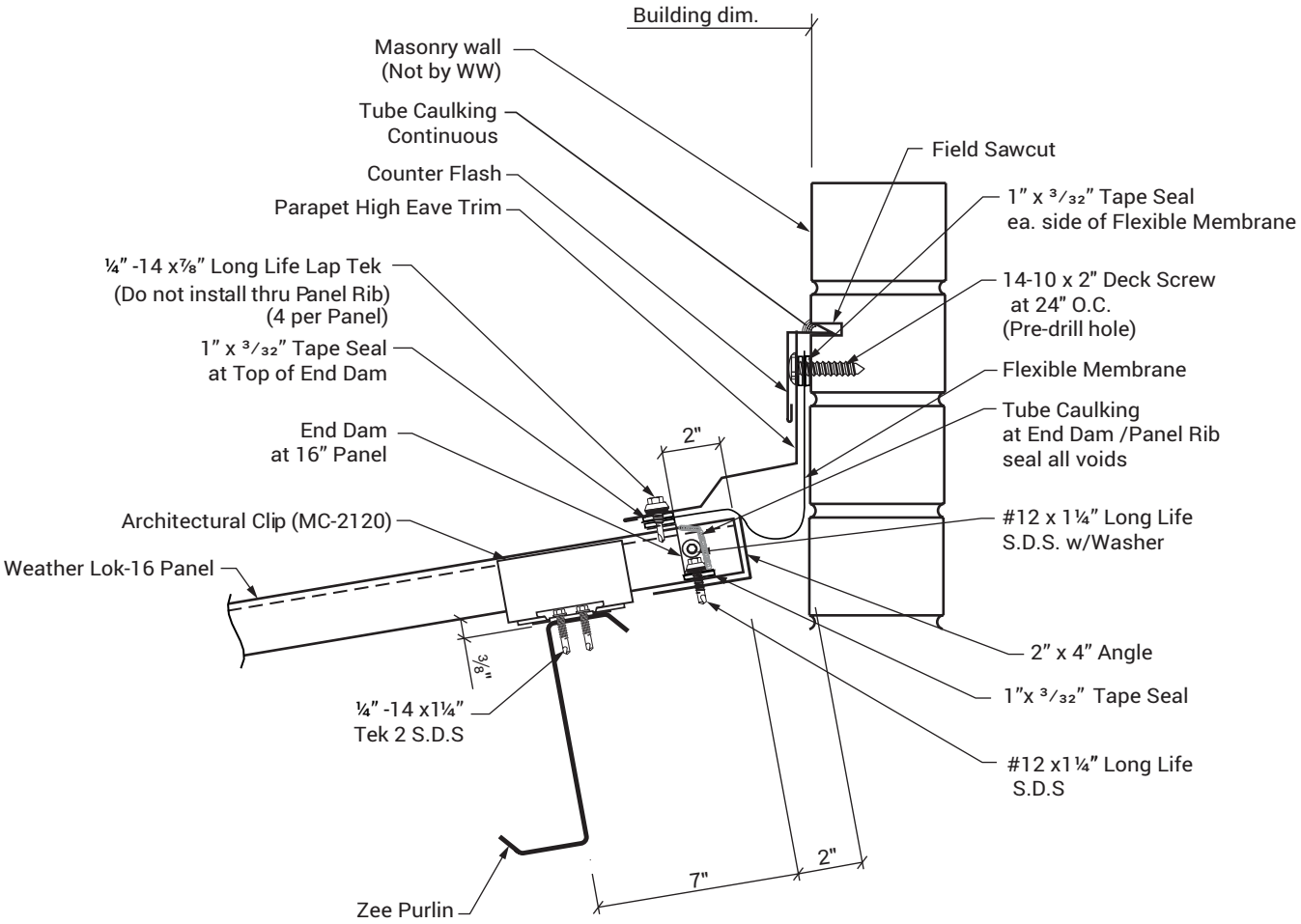

VALLEY DETAIL HIGH SYSTEM SHOWN

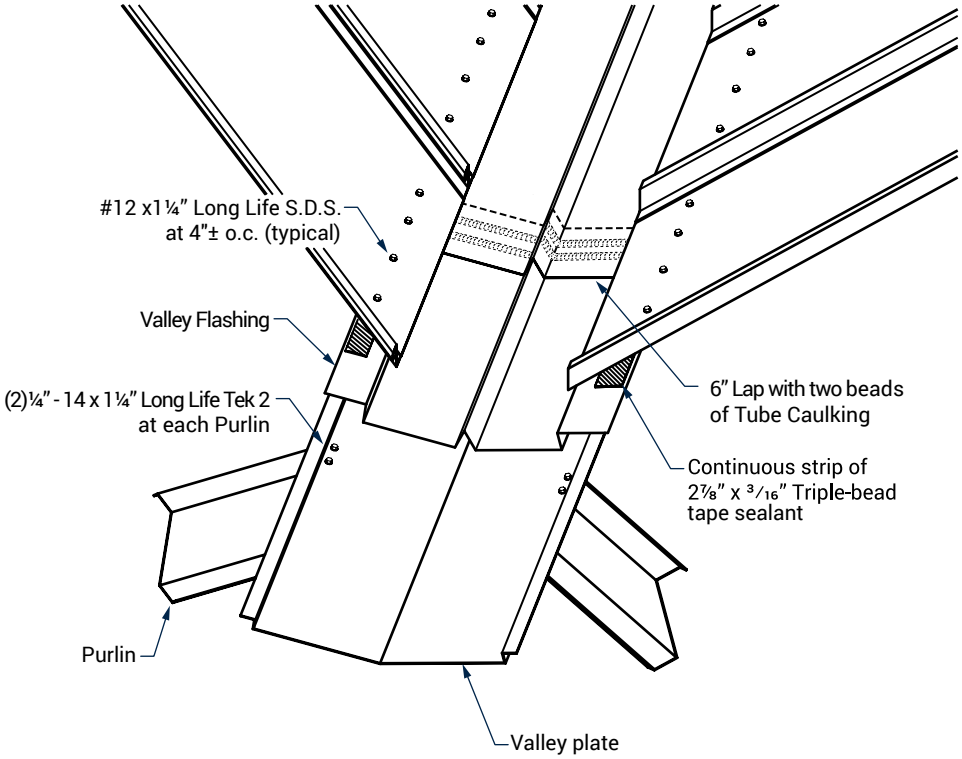

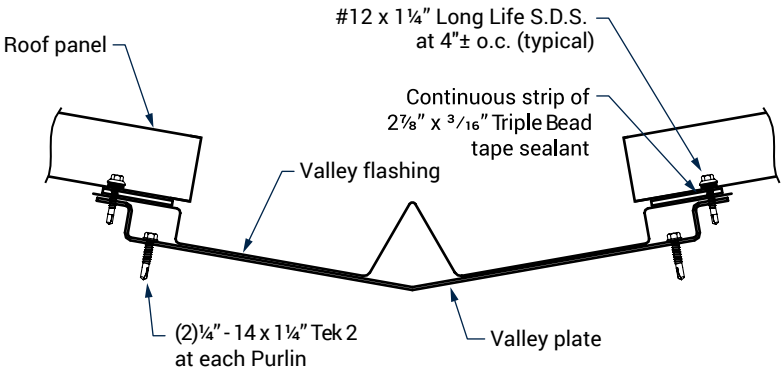

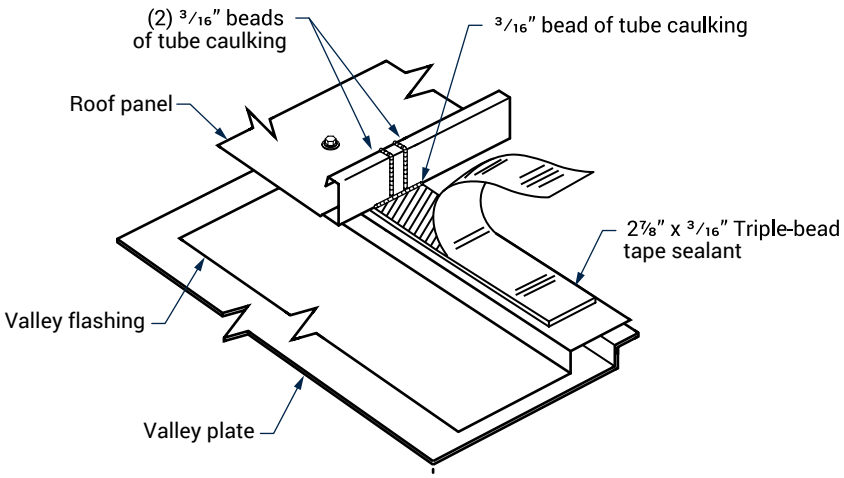

1. Attach the valley plate to the each purlin with (2) ¼" - 14 x 1¼" Long Life Tek 2 S.D.S. on each side of valley plate.
2. Lay the valley flashing into the pan of the valley plate.
3. Verify that all tape seal and caulking has been installed correctly before attaching the panels to the valley plate.
4. The valley laps are 6" in length. Apply (2) beads of urethane sealant 2" apart to the lower valley. Apply the upper valley over the lower valley and seal without exposed fasteners.
5. Lay a continuous strip of 2⅞" x3/16" tape seal along both outside edges of the valley flashing, directly over the valley plate flange.
6. Field bevel cut the roof panels as required.
7. Caulk between the vertical legs of the panels.
8. Attach the roof panels to the valley plate with #12 x 1¼" self-drilling screws on 4" centers.

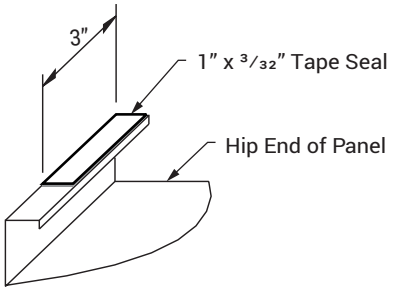

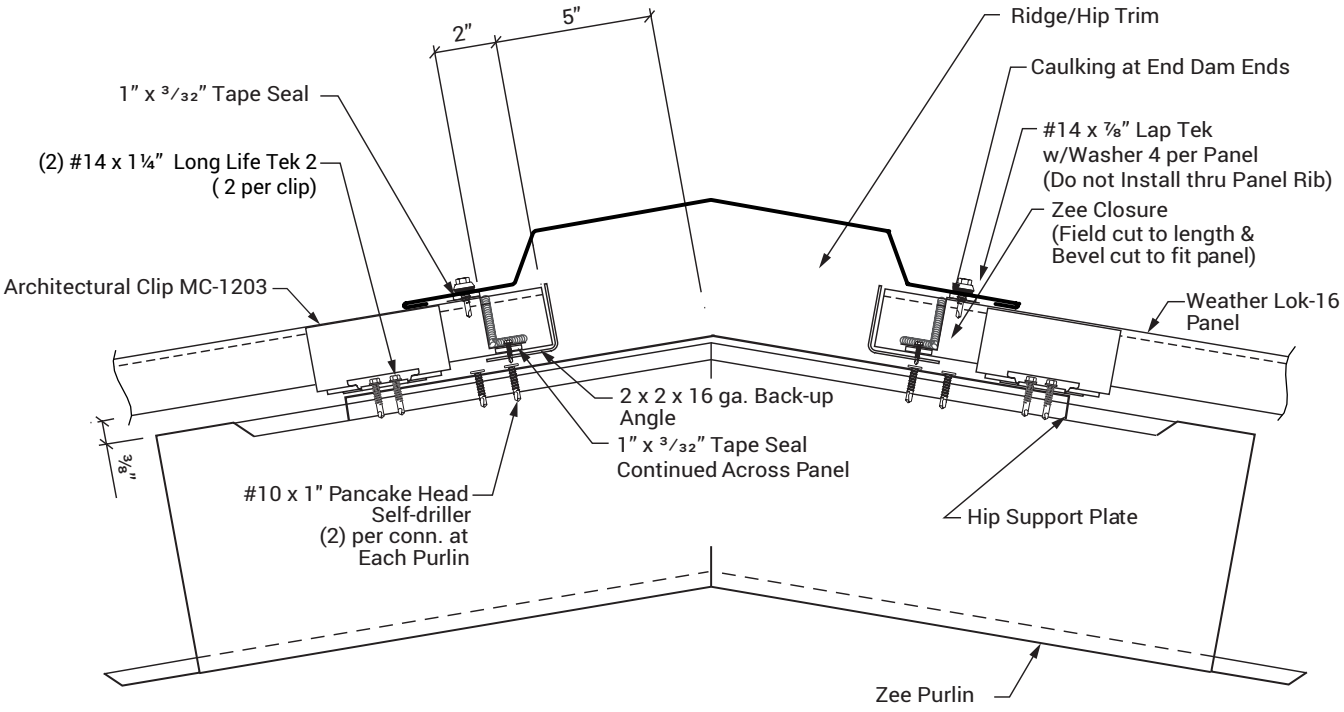

NOTES:

1. Attach each side of hip plate at each purlin with (2) 12-14 x 1" Pancake Head S.D.S.
2. Bevel cut roof panels and install with last clip on hip plate may sure the 3" piece of 1" x 3/32" Tape seal is placed on the male leg of each panel.
3. Install the 2" x 2" backup angle.
4. Field cut and install Zee closure with 1" x 3/32" tape seal and urethane sealant.
5. Caulk end of closures with urethane sealant.

40PARAPET RAKE

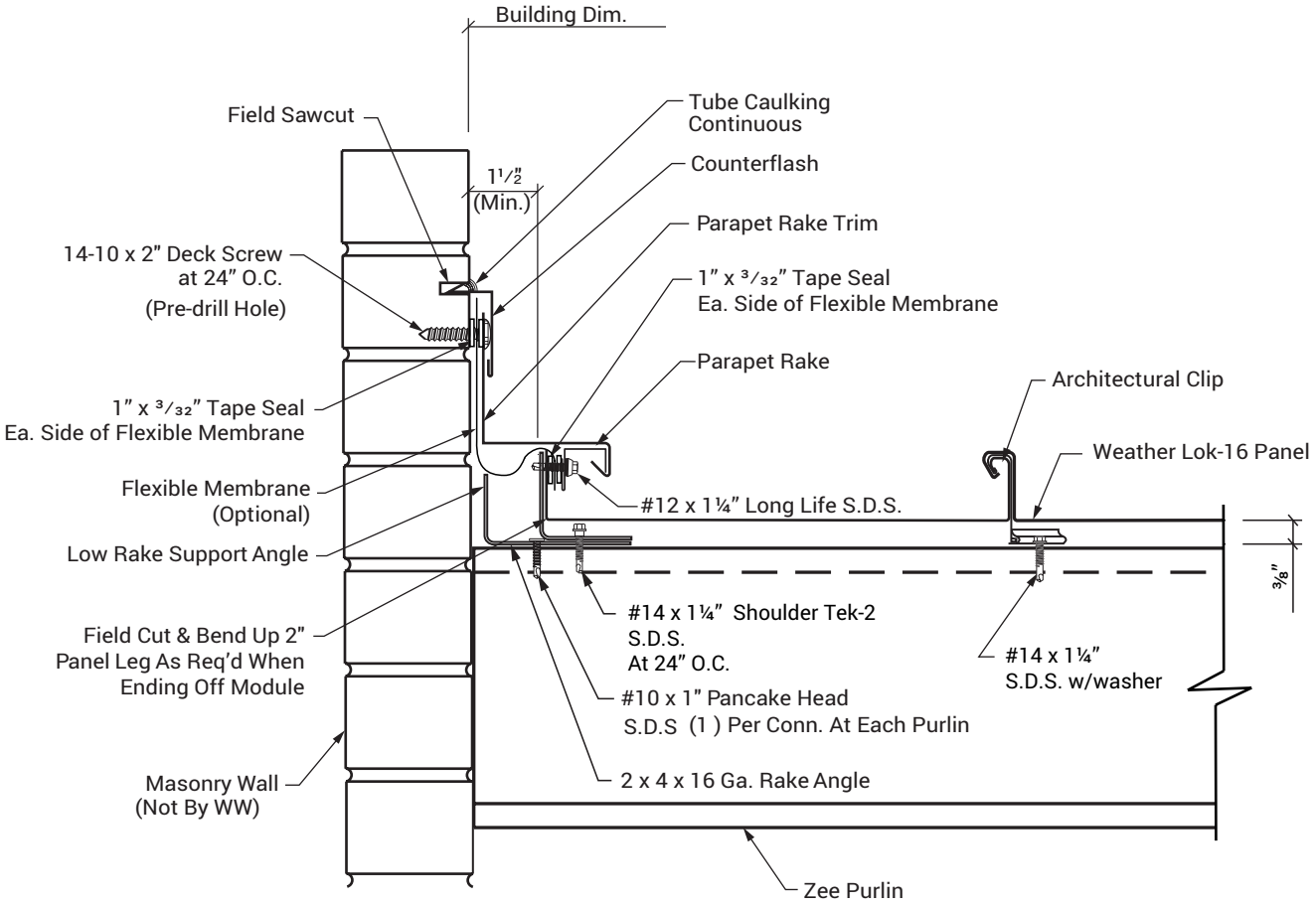

VENTED RIDGE

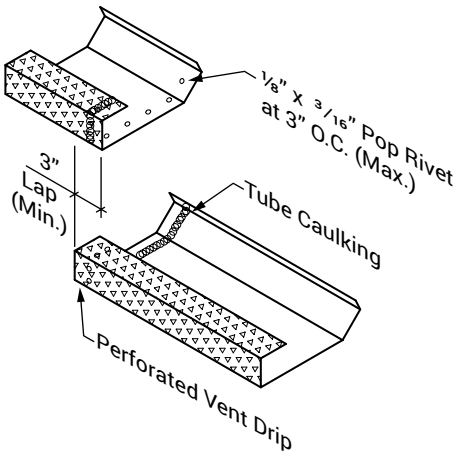

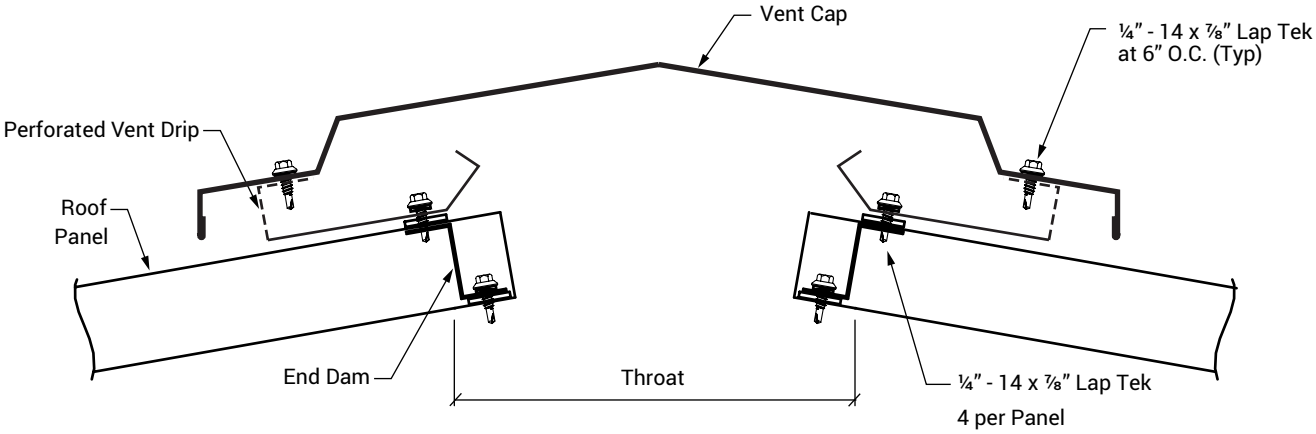

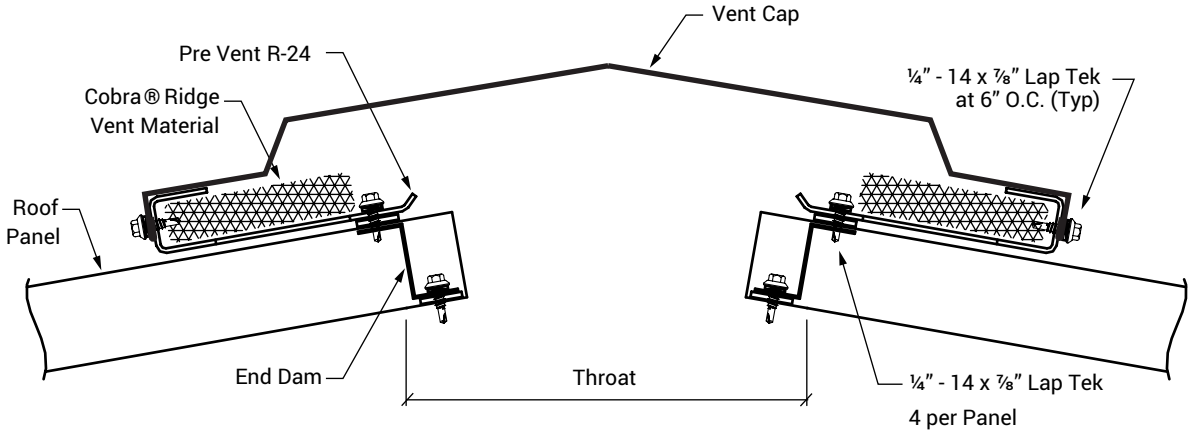

NOTES:

1. Install vent per manufacturer's instructions.
2. Lay a continuous strip of 1" x 3/32" tape seal along the top of the end dams (ED-124).
3. Attach the PreVent R-24 channel and Cobra® vent material to end dam with ¼" - 14 x ⅞" Lap-Tek 4 per panel.
4. Attach the vent cap to the PreVent R-24 channel with ¼" - 14 x ⅞" Lap-Tek on 6" centers. Make sure the Cobra® vent material is installed before attaching the vent cap.
5. Use (10) ¼" - 14 x ⅞" Lap-Tek at the end cap attachment.
6. Lay a continuous bead of 3/16" bead of tube caulking along the joint between the vent cap and ridge cap.

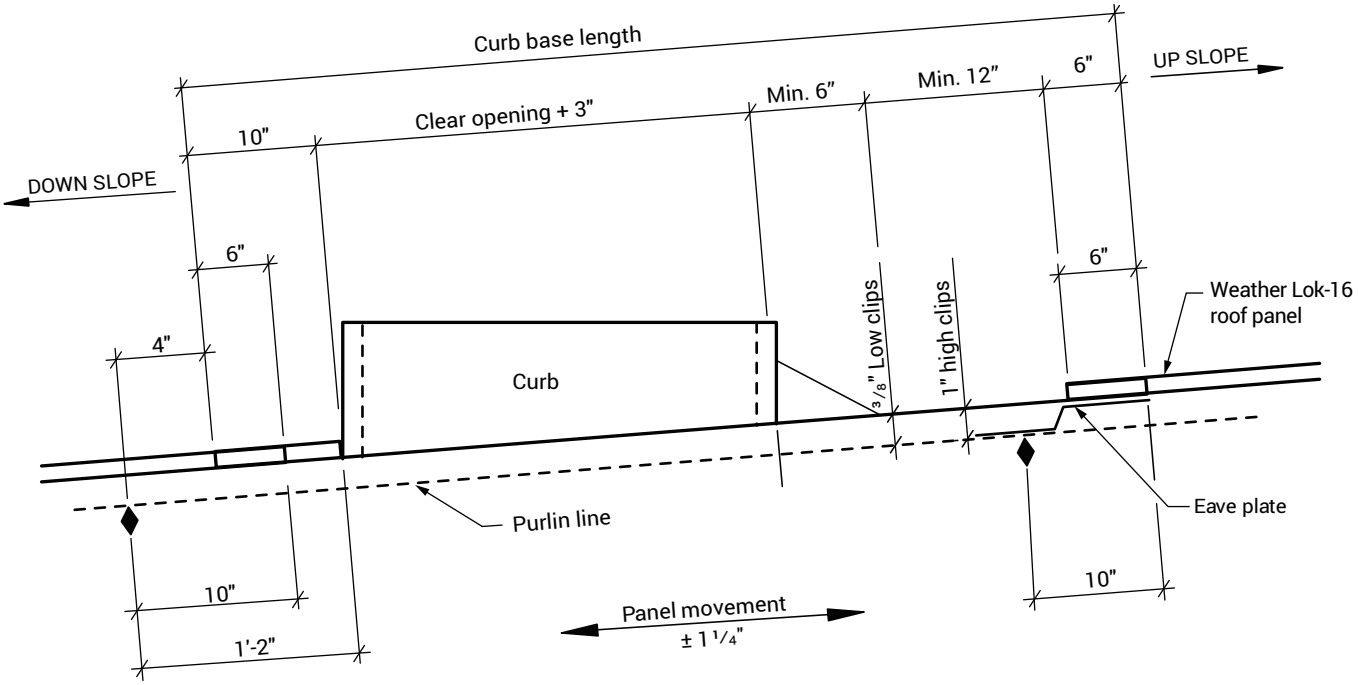

FLOATING ROOF CURB SUPPORT GUIDE

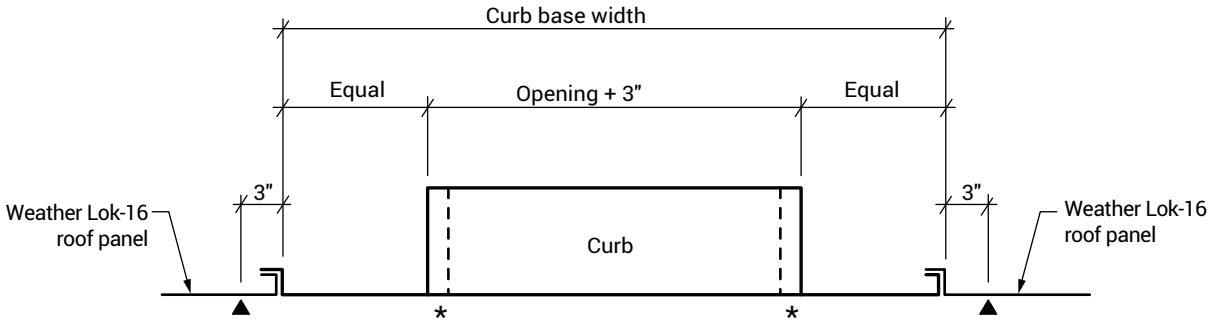

- ♦ Indicates roof panel supports.
- ▲ Indicates curb base supports.
- * Additional uplift supports are required for the attachment of the curb up lift plates only.

CAUTION

It is the user's responsibility to ensure that openings cut into the roof for installation of roof curbs comply with State, Federal and OSHA regulations and laws, including, but not limited to, guarding roof openings with plywood, fixed standard railings or other acceptable safety controls that prevent fall-through.

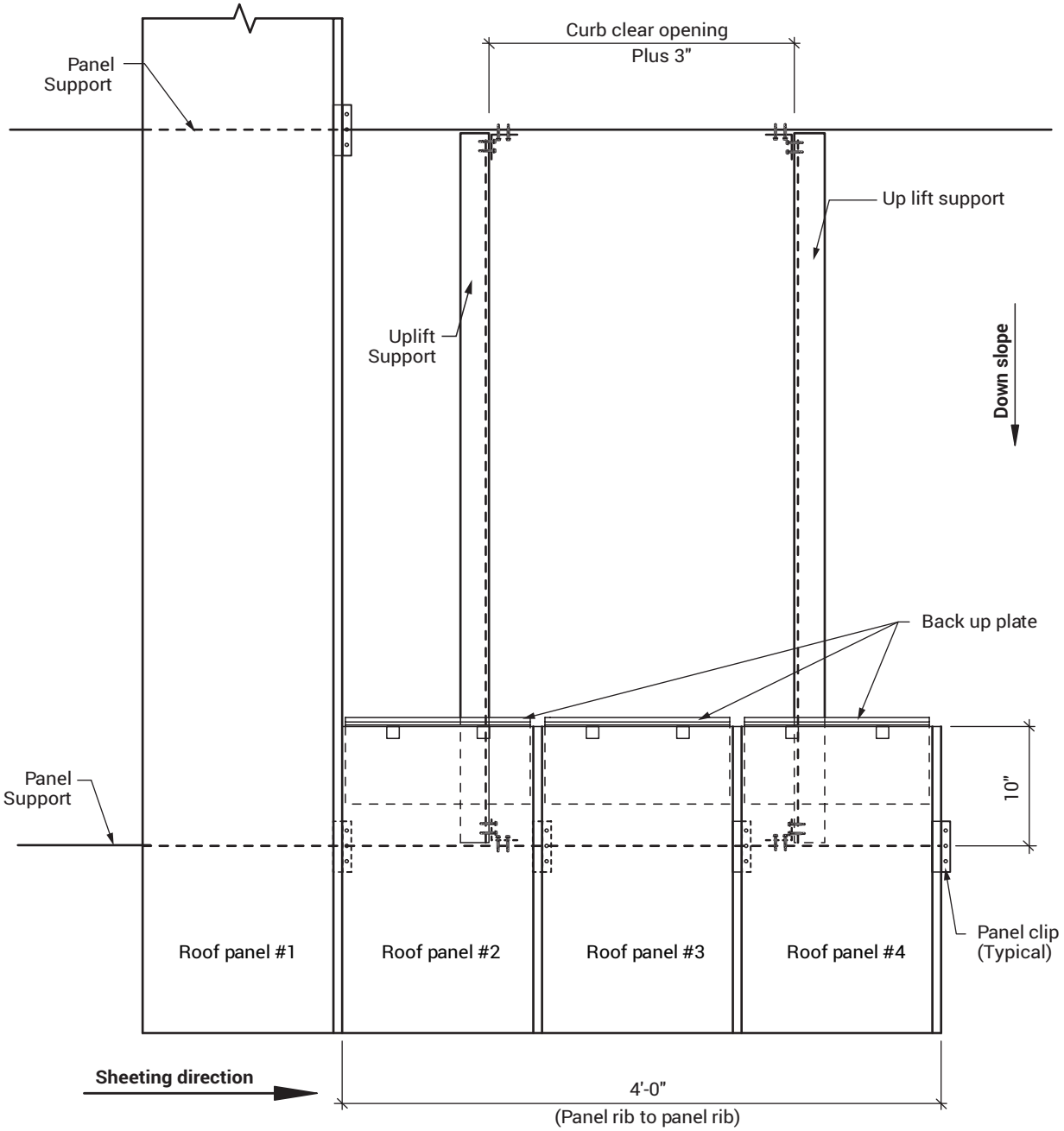

CURB BASE INSTALLATION

NOTES:

1. Install all lower roof panels to support the curb base.
2. Install back up plates.

CAUTION

It is the user's responsibility to ensure that openings cut into the roof for installation of roof curbs comply with State, Federal and OSHA regulations and laws, including, but not limited to, guarding roof openings with plywood, fixed standard railings or other acceptable safety controls that prevent fall-through.

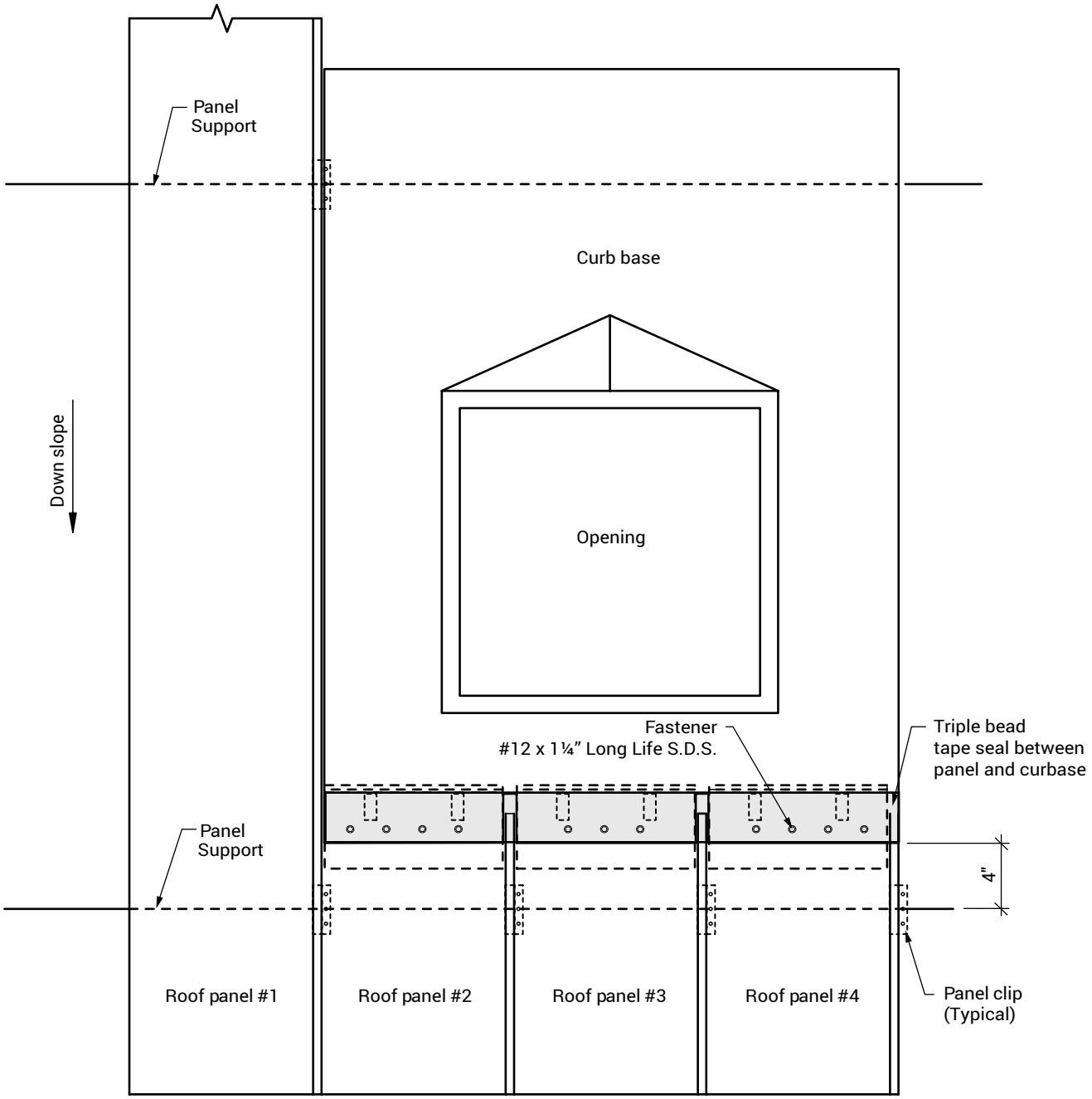

CURB BASE INSTALLATION

NOTES:
1. Apply triple bead tape seal to the panels covered by the curb.
2. Field notch curb to fit around intermediate panel.

CAUTION
It is the user's responsibility to ensure that openings cut into the roof for installation of roof curbs comply with State, Federal and OSHA regulations and laws, including, but not limited to, guarding roof openings with plywood, fixed standard railings or other acceptable safety controls that prevent fall-through.

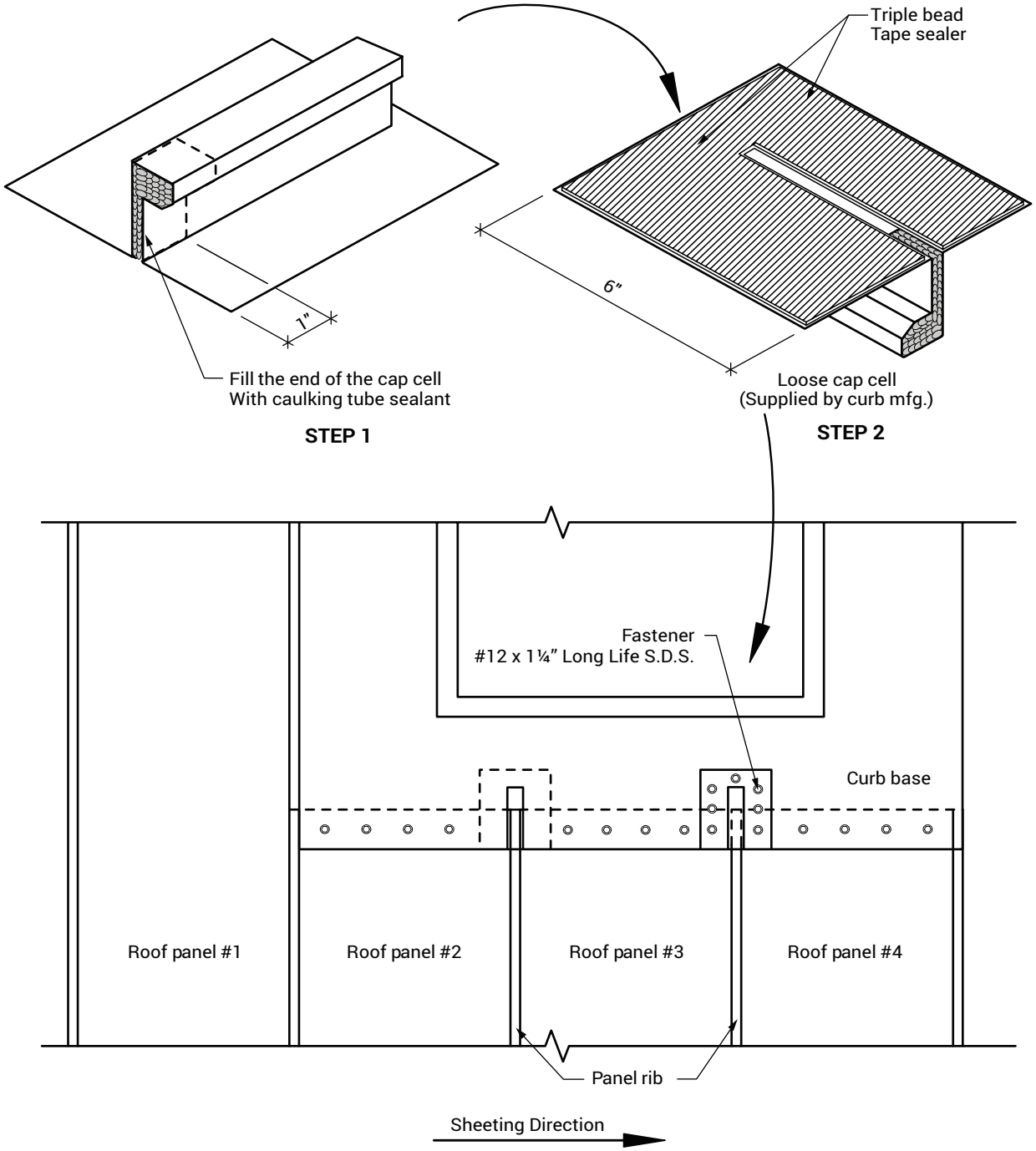

CAP CELL INSTALLATION

NOTES:

1. Fill Fin cavity of Cap Cell with Urethane Tube Sealant.
2. Apply Triple Bead tape sealer on the bottom of (2) loose the Cap Cell.
3. Install over the Panel Fins and attach with Fastener #12 x 1¼" Long Life Lap Tek

CAUTION

It is the user's responsibility to ensure that openings cut into the roof for installation of roof curbs comply with State, Federal and OSHA regulations and laws, including, but not limited to, guarding roof openings with plywood, fixed standard railings or other acceptable safety controls that prevent fall-through.

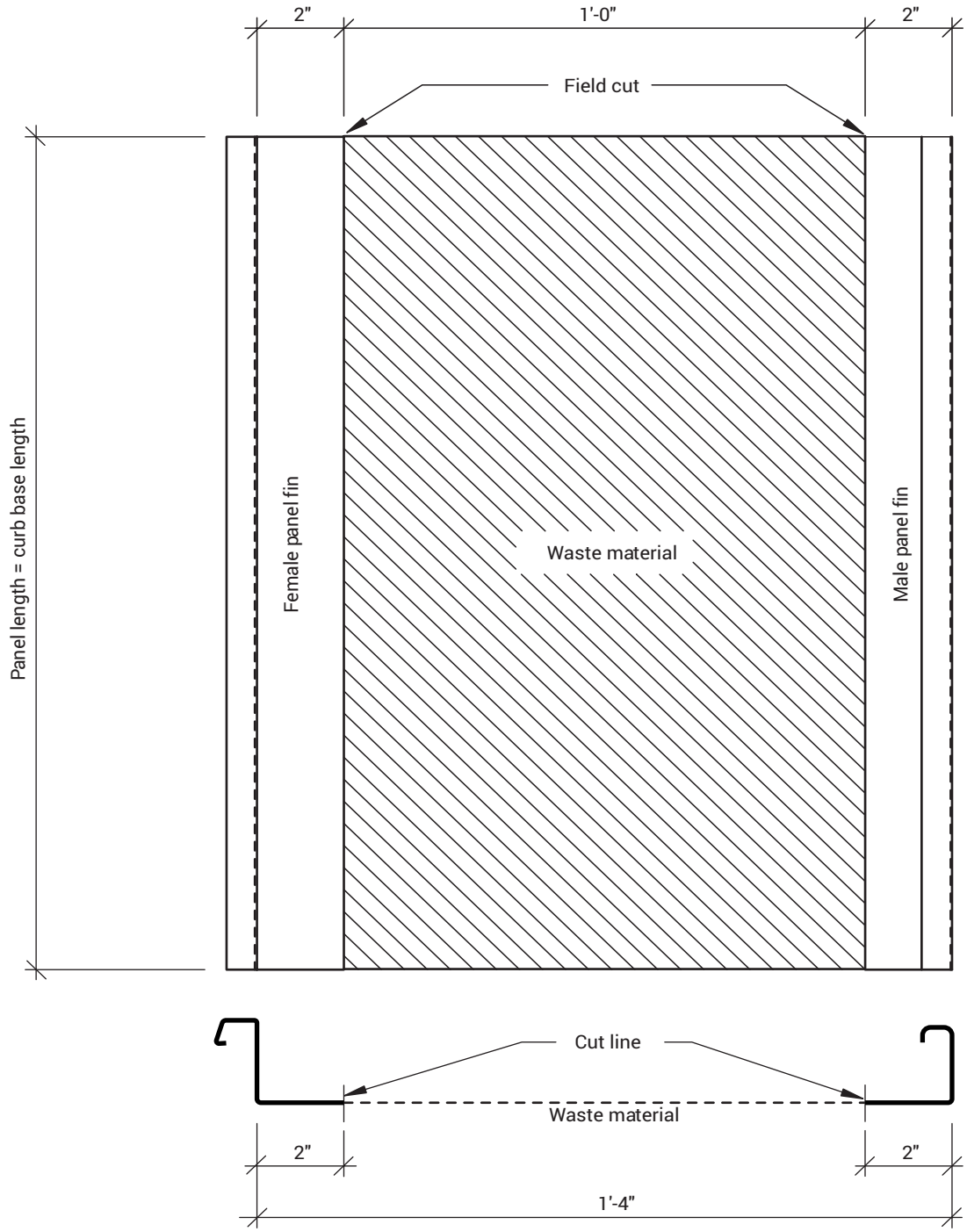

CURB PANEL FIN PREPARATION

NOTES:

1. Field cut male and female panel ribs from an extra roof panel supplied by Whirlwind Steel.

CAUTION

It is the user's responsibility to ensure that openings cut into the roof for installation of roof curbs comply with State, Federal and OSHA regulations and laws, including, but not limited to, guarding roof openings with plywood, fixed standard railings or other acceptable safety controls that prevent fall-through.

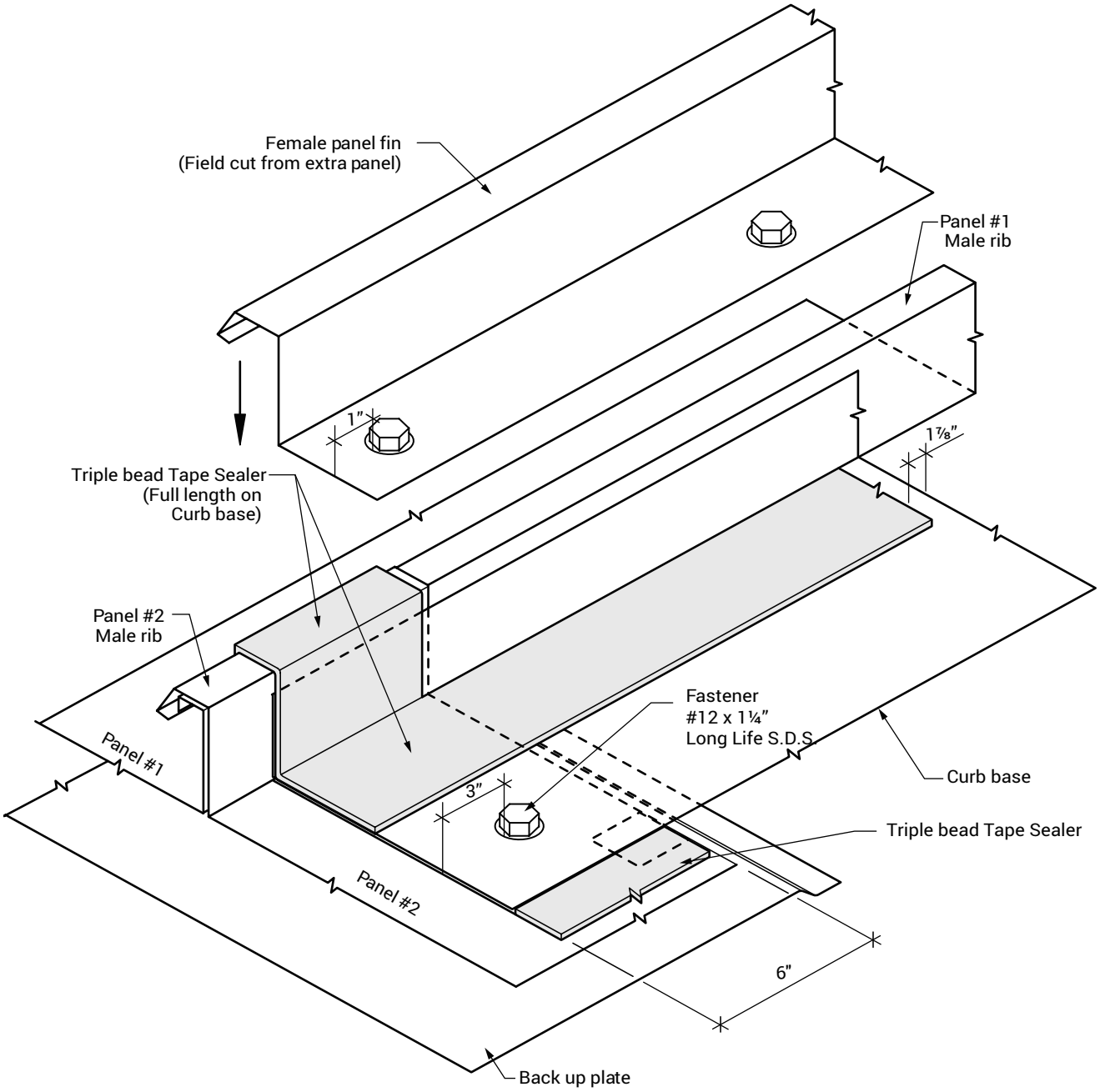

FEMALE PANEL FIN INSTALLATION

NOTES:

1. Install Triple Bead tape sealer to panel #2 Male Rib, and along the edge of the Curb Base.
2. Install the Female Panel Rib over the tape sealer and attach with Fastener #12 x 1¼" Long Life S.D.S.

CAUTION

It is the user's responsibility to ensure that openings cut into the roof for installation of roof curbs comply with State, Federal and OSHA regulations and laws, including, but not limited to, guarding roof openings with plywood, fixed standard railings or other acceptable safety controls that prevent fall-through.

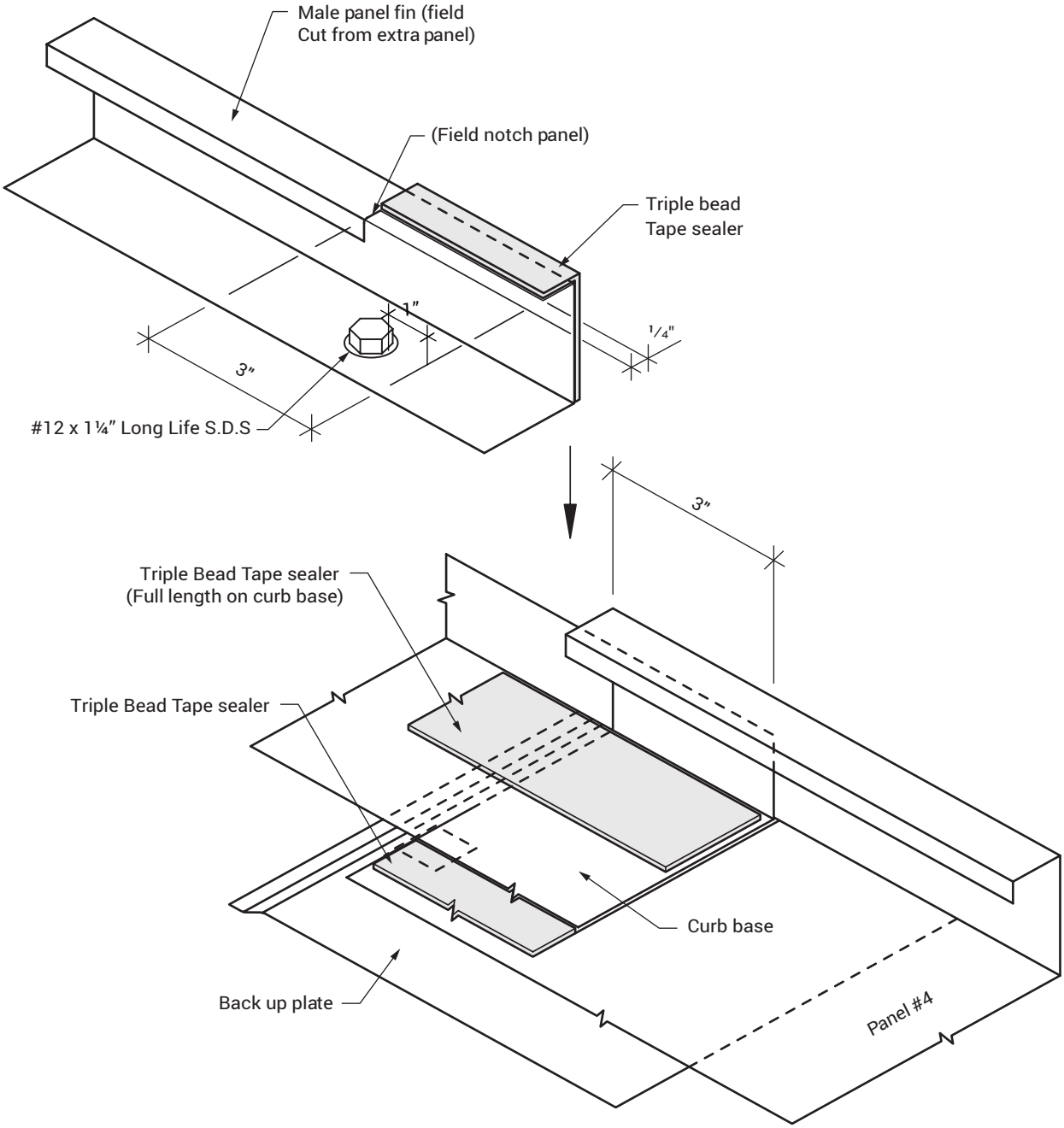

MALE PANEL FIN INSTALLATION

NOTES:

1. Notch the Male Panel Fin. Apply Triple Bead tape sealer to the top and side of the Male Panel Fin.
2. Apply Triple Bead tape sealer on the Curb Base under the Male Panel Fin.
3. Insert the field cut Male Panel Fin on top of the Triple Bead tape sealer.

CAUTION

It is the user's responsibility to ensure that openings cut into the roof for installation of roof curbs comply with State, Federal and OSHA regulations and laws, including, but not limited to, guarding roof openings with plywood, fixed standard railings or other acceptable safety controls that prevent fall-through.

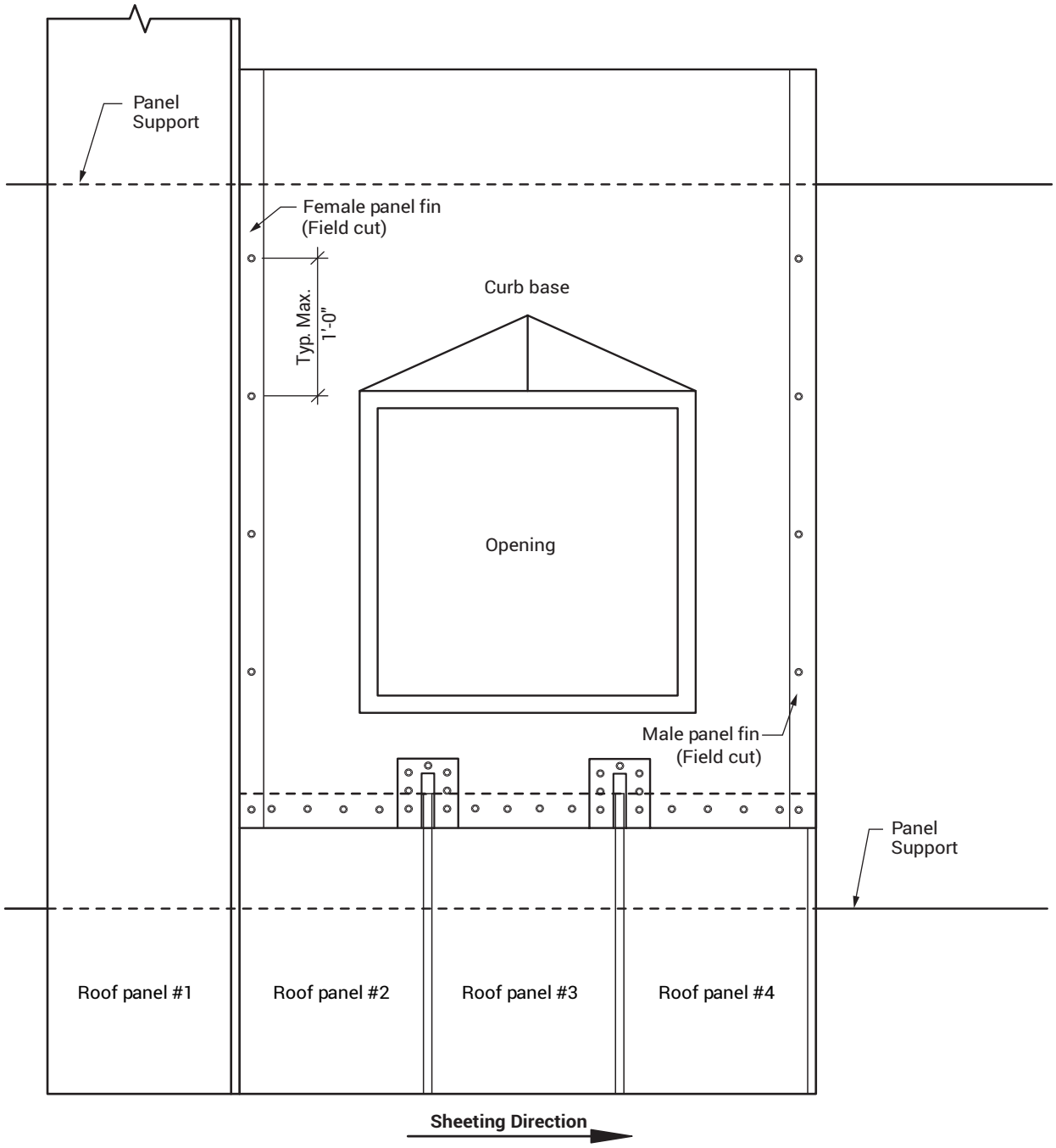

CURB BASE INSTALLATION

CAUTION

It is the user's responsibility to ensure that openings cut into the roof for installation of roof curbs comply with State, Federal and OSHA regulations and laws, including, but not limited to, guarding roof openings with plywood, fixed standard railings or other acceptable safety controls that prevent fall-through.

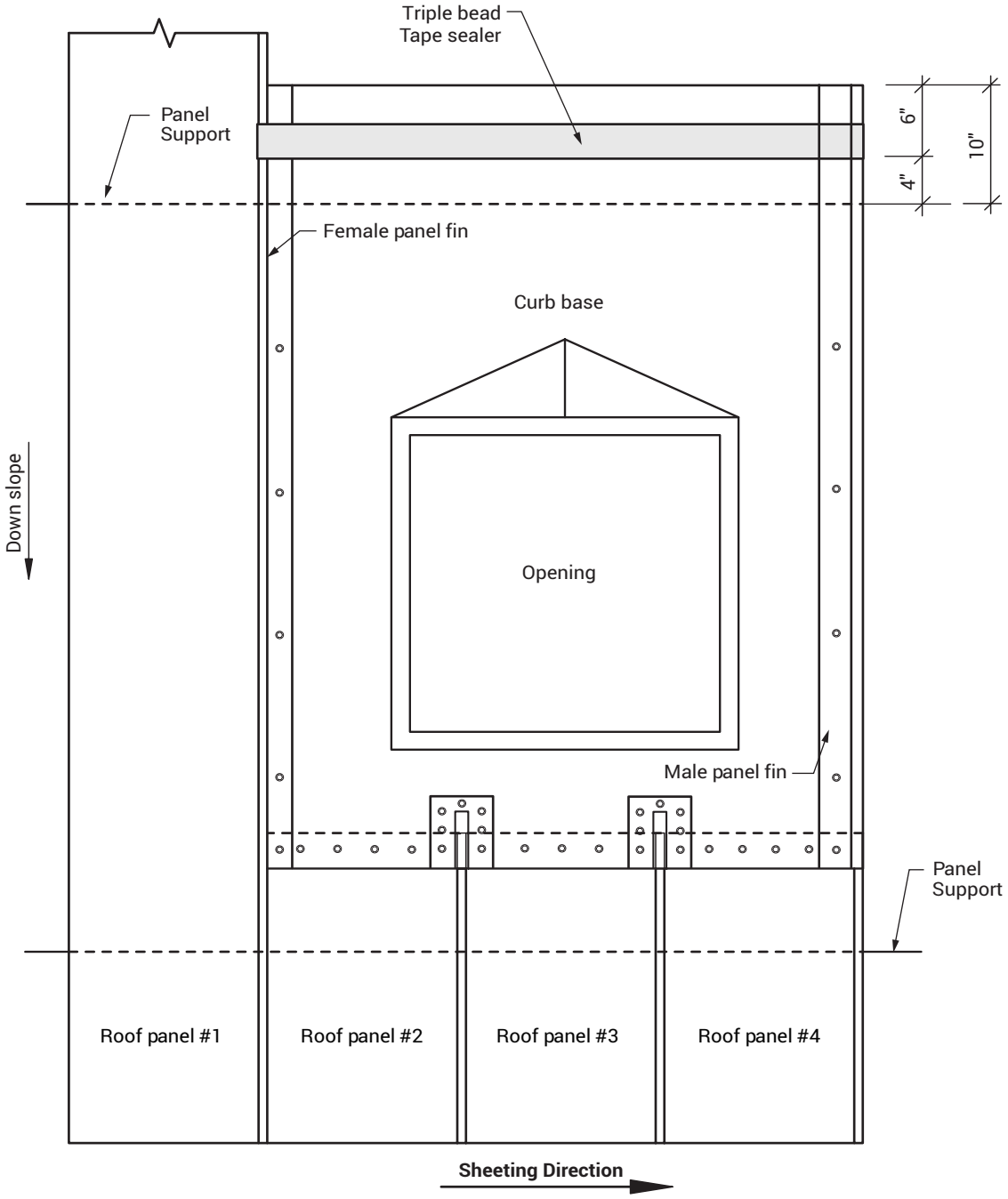

CURB BASE INSTALLATION

NOTES:

1. Apply Triple Bead tape sealer on Curb Base at the up slope end.

CAUTION

It is the user's responsibility to ensure that openings cut into the roof for installation of roof curbs comply with State, Federal and OSHA regulations and laws, including, but not limited to, guarding roof openings with plywood, fixed standard railings or other acceptable safety controls that prevent fall-through.

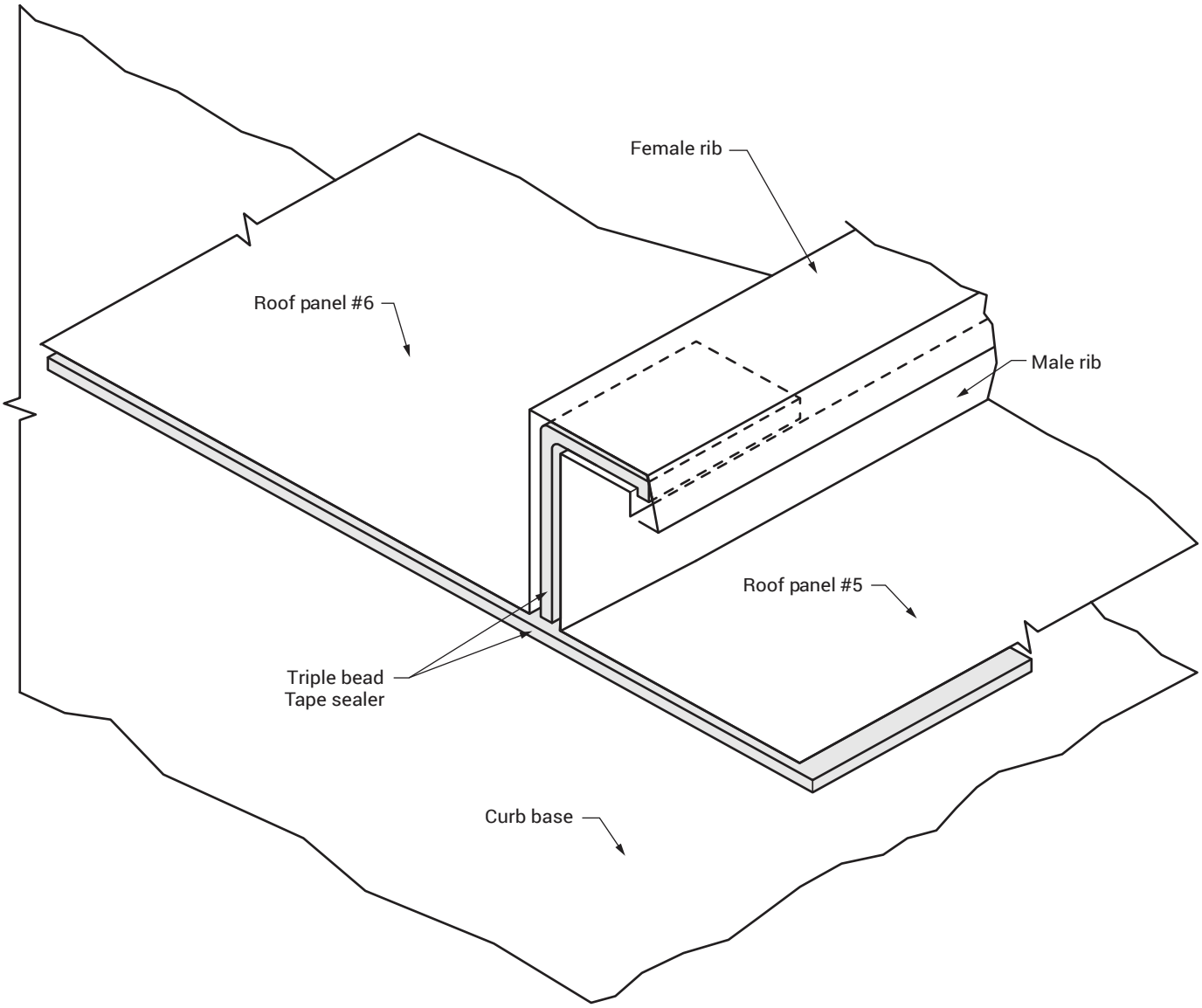

CURB BASE INSTALLATION

NOTES:
1. Apply Triple Bead tape sealer between the Panel Ribs on Panels #5 and #6 for water seal.

CAUTION
It is the user's responsibility to ensure that openings cut into the roof for installation of roof curbs comply with State, Federal and OSHA regulations and laws, including, but not limited to, guarding roof openings with plywood, fixed standard railings or other acceptable safety controls that prevent fall-through.

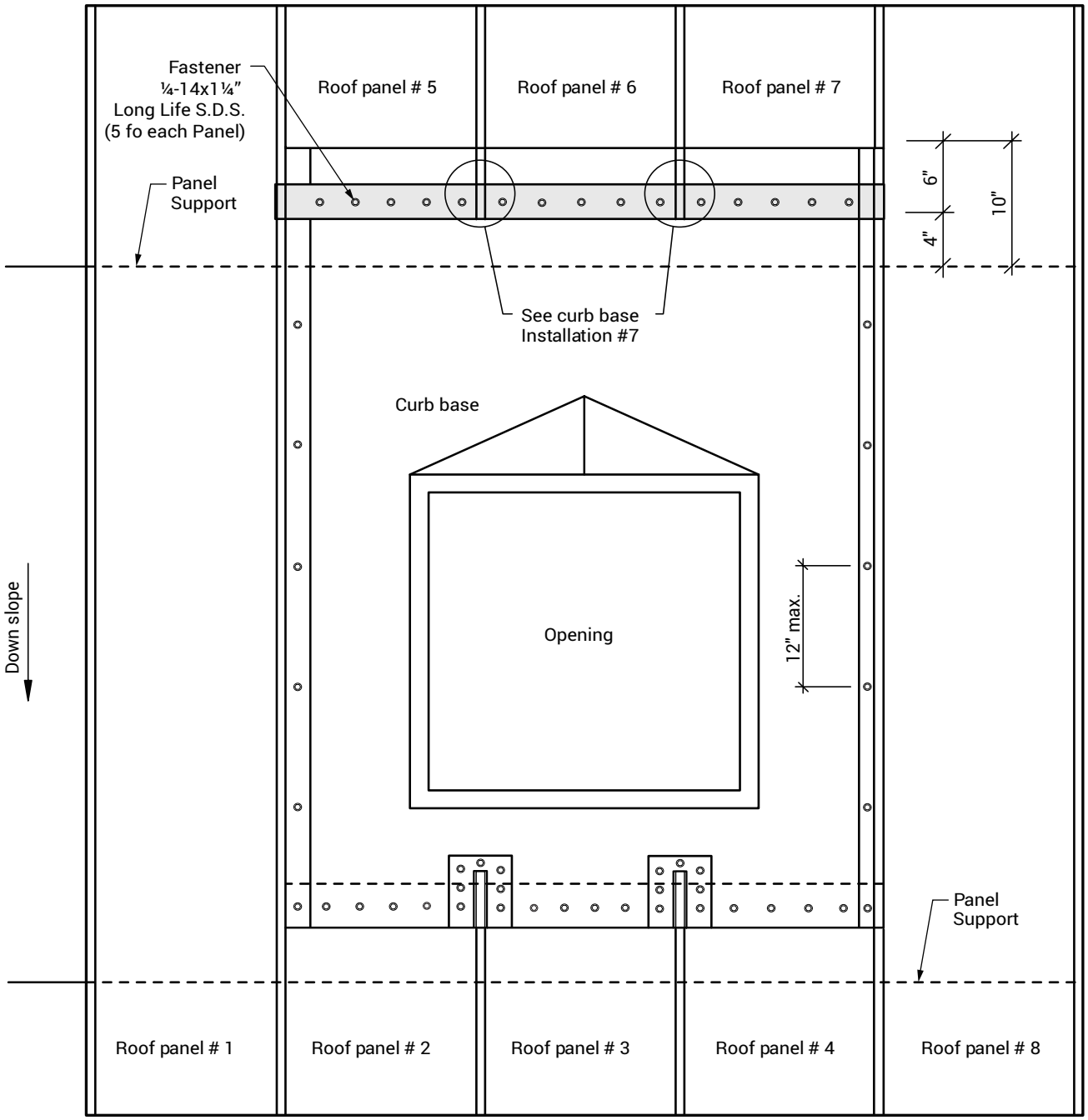

CURB BASE INSTALLATION

NOTES:

1. Install Roof Panels #5, #6 & #7 to the Curb Base on Top of the tape sealer with Fastener #12 x 1¼" Long Life S.D.S.
2. Install Roof Panel #8.

CAUTION

It is the user's responsibility to ensure that openings cut into the roof for installation of roof curbs comply with State, Federal and OSHA regulations and laws, including, but not limited to, guarding roof openings with plywood, fixed standard railings or other acceptable safety controls that prevent fall-through.

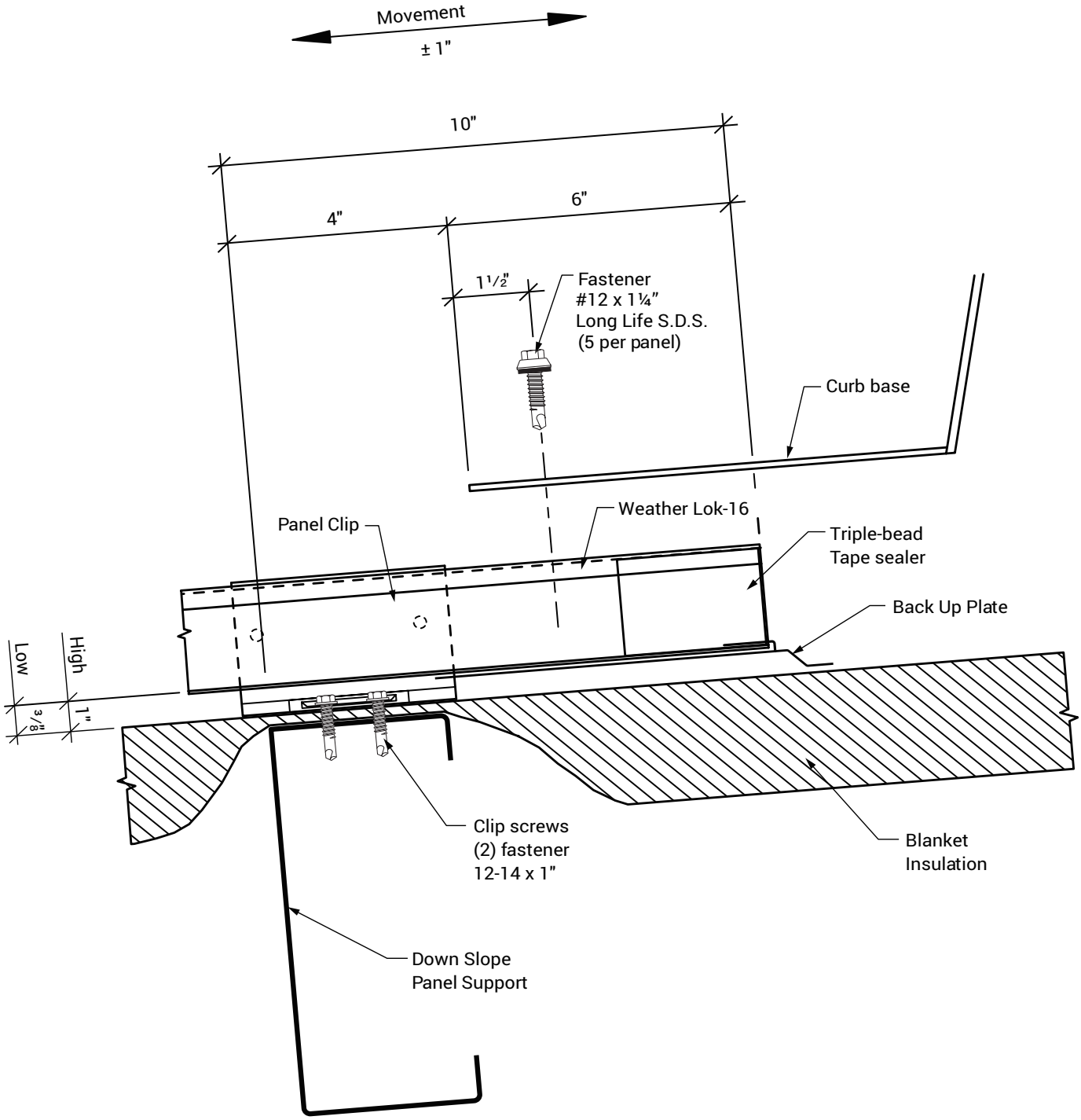

DOWN SLOPE CURB BASE END LAP

CAUTION

It is the user's responsibility to ensure that openings cut into the roof for installation of roof curbs comply with State, Federal and OSHA regulations and laws, including, but not limited to, guarding roof openings with plywood, fixed standard railings or other acceptable safety controls that prevent fall-through.

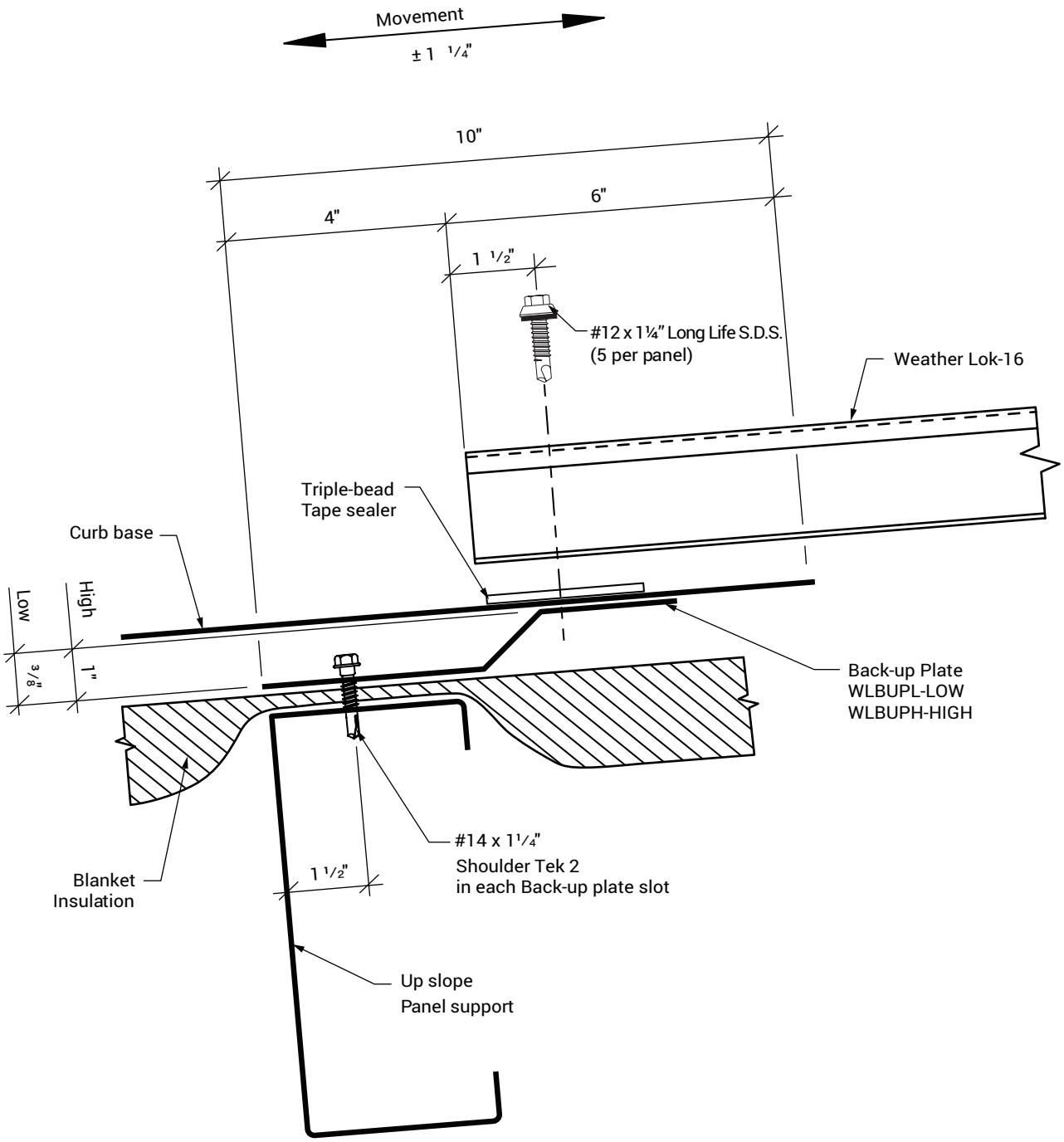

UP SLOPE CURB BASE END LAP

CAUTION

It is the user's responsibility to ensure that openings cut into the roof for installation of roof curbs comply with State, Federal and OSHA regulations and laws, including, but not limited to, guarding roof openings with plywood, fixed standard railings or other acceptable safety controls that prevent fall-through.

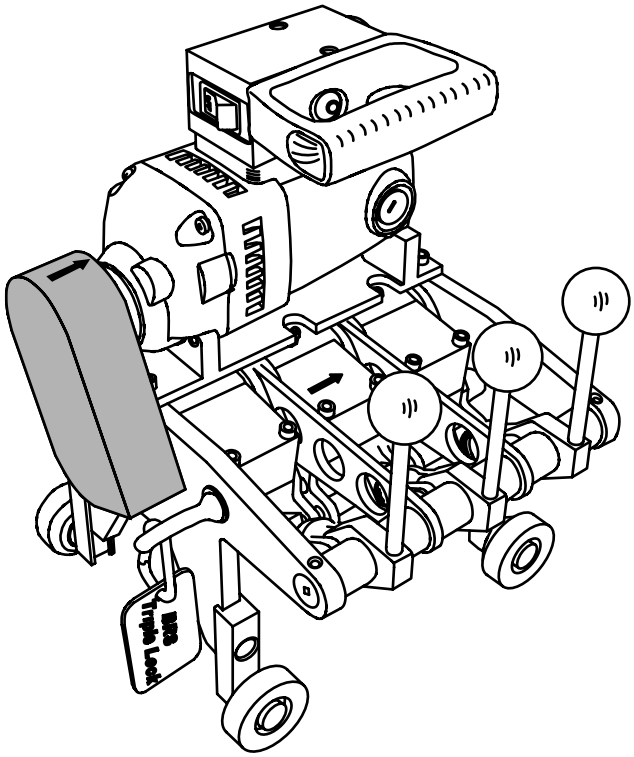

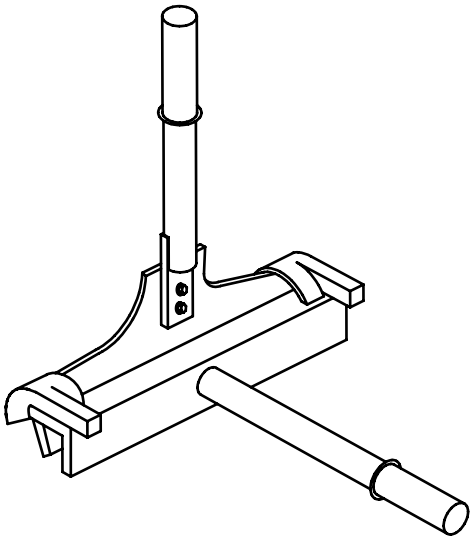

The seaming guide is provided by Whirlwind Steel Buildings, Inc. to you the customers and erectors as the recommended procedures for the correct seaming of the Weather Lok-16 Standing Seam Roof System.

The erection drawings govern the specific seam requirements. In case of conflict between this installation guide and the erection drawings, the erection drawings will have precedence.

The customer is responsible for proper seaming of the roofing accordance with the erection drawings and this seaming guide, and in accordance with good engineering and construction practices.

Whirlwind Steel Buildings, Inc. does not guarantee and is not liable for the quality of erection. Whirlwind Steel Buildings, Inc. is not responsible for building defects that may be attributed to improper erection or the negligence of other parties.

The following seamer equipment depicted in this manual is for seamer's manufactured, provided and serviced by Quality Roof Seamers, Inc. (QRS, Inc.) and are the only seamers approved to be used on Weather Lok-16 standing seam projects.

Clarification concerning the Weather Lok-16 roof installation and seaming should be directed to the Customer Service.

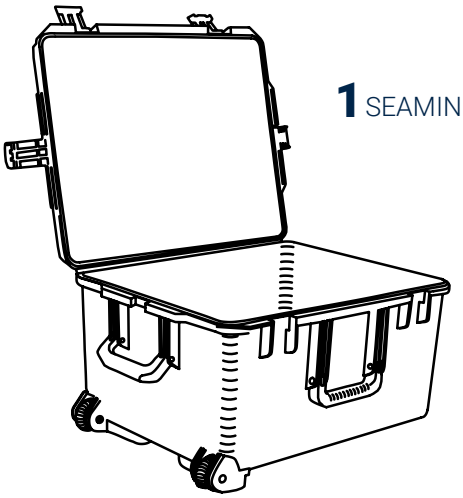

1 SEAMING KIT

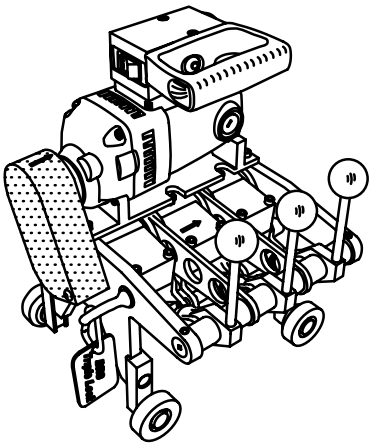

2 MOTOR SEAMING MACHINE

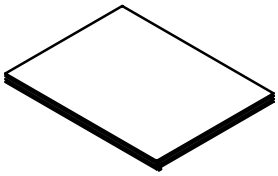

3 RETURN DOCUMENTS

4 REPAIR / TOOL KIT

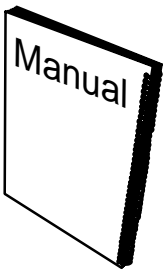

5 SEAMER MANUAL

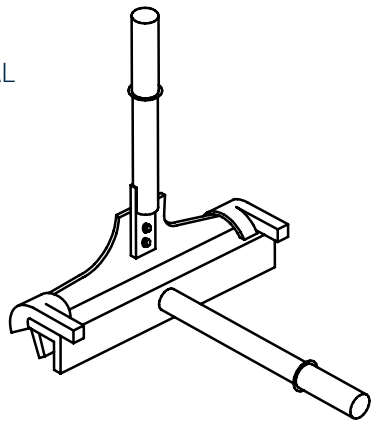

6 PRIMARY MANUAL SEAMING TOOL

SPECIALIZED SEAMING TOOLS

The seaming of the Weather Lok-16 roof panels require special seaming tools which are available only through the Quality Roof Seamers.

SEAMING KIT

The seaming equipment will normally be provided as a seaming kit. The seaming kit will consist of the following:

1. Seaming Kit Chest (contains and protects the seaming tools during shipment and storage).
2. Motor Seaming Machine (provided only for Weather Lok-16).
3. Return shipping documents.
4. Repair parts, hex and end wrenches
5. Seaming Guide.
6. Primary Manual Seaming Tool.

CAUTION

The use of other or unapproved seaming equipment may result in faulty and/or damaged seams and will invalidate the roof system's engineering material and performance warranties.

Contact the Whirlwind Steel Buildings, Inc. Customer Service Department to arrange the scheduling, delivery and return of the seaming tools.

RECEIVING AND SHIPPING

Upon receipt of the seaming kit, and before signing the shipping receipt, verify that the seaming kit is received in good condition without damage or loss of contents.

If there is damage or loss of contents, immediately file the claim with the shipper and notify Quality Roof Seamers, Inc. for replacement instructions.

Upon completion of the roof seaming, promptly return the seaming kit to Quality Roof Seamers, Inc. in accordance with the instructions on the return shipping documents. The return shipping documents are provided in the seaming kit. All materials must be returned (even worn rollers) intact and failure to do so will result in a charge for missing items.

HANDLING AND STORAGE

Provide safe and secure handling of the seaming tools when in use.
The motor seaming machine weighs at least 65 lbs. and can cause severe damage and injury if it falls and should be tethered at all times.

The machine may be too heavy to safely carry up a ladder. Always hoist the machine onto the roof with proper lifting equipment or with a proper sized rope/tether tied or hooked securely to the machine's lifting eye.

CAUTION

- When starting and finishing the seaming machine at the edges of the roof, the operator and machines must be securely positioned and tethered so that he can safely lift the seaming machine on and off of the seam.
- When running the machine in the downslope direction, the seaming machine will have greater downhill inertia and coasting distance.
- When not locked to the seam, the motor seaming machine can freely roll on its wheels. Always secure the machine to prevent its rolling or sliding off the roof.
- At the days end or when the seaming tools are not in use, they must be stored in the seaming kit chest and the chest secured in a safe and dry area. The seaming tools must be cleaned and dried before storing.

ELECTRICAL REQUIREMENTS

The seaming machine motor requires a minimum electrical power supply of 20 amp @ 120 Volt @ 60 hz AC.

Electrical Service and Cords
The electrical service and the electrical cords to the seaming machine must be of sufficient capacity to provide the full 20 amp @ 120 Volts at the seaming machine. If other tools or equipment are being used on the same service, the service and cord capacity must be increased accordingly.

CAUTION

Low voltage due to insufficient service capacity, insufficient cord size or excessive cord length will cause overheating and burnout of the seaming machine's motor.

RECOMMENDED EXTENSION CORD SIZE				
Distance (Ft)	0-50	50-100	100-200	200-300
Wire Gauge	12	10	8	6

ELECTRICAL SAFETY

Check that the power cords are fitted with the correct plug for safe and secure electrical connection to the seaming machine. Check that the power cords are properly grounded and that the service has a ground fault circuit breaker.

Check that the electrical cord is of sufficient length to extend the full length of the area to be seamed without stress on the cord or its connections. Check that the path for the cord is clear and that the cord is clear of snagging on panel edges or entanglement into the seaming machine rolls.

INSURANCE

The Quality Roof Seamer tools are custom built, specialized equipment and are costly to replace. You should provide adequate insurance coverage on the seaming tools while they are in your possession and use.

ROOF PERFORMANCE

The roof panels must be correctly seamed before the roof system can provide its designed wind load and weather resistance capability. This means that an un-seamed or improperly seamed roof is subject to wind load failure and/or weather resistance failure.

WHEN TO SEAM

Whenever possible, the installed roof panels should be seamed at the finish of each days work. If high wind or rain/snow conditions are imminent, the installed roof panels must be seamed before such conditions occur.

TEMPORARY SEAMING

On roofs requiring mechanical seams, it may not always be practical or feasible to motor seam the roof panels until after the roof installation is completed. Motor seamed roof panels are difficult to reposition or replace and seaming machines may not always be available during the entire roof installation period.

In such cases, it may be desirable to temporarily manual hand seam the roof panels at the panel ends, clips and end laps with the manual seaming tool, then later complete the seaming with the motor seaming machine.

Since temporary seaming is a practical approach, it would be advisable to have several hand seamers to keep for use on a job by job basis. There will be a hand seamer sent with each motorized seamer order, how ever its arrival to the jobsite is usually too late in the sheeting process to insure against any sudden weather changes or safety issues...

Important: Any temporary seaming must be approved by the project's designer.

Note: The temporary seaming process/procedure is identical to the steps taken to prepare for the primary Weather Lok-16 seaming operation.

CAUTION

Low voltage due to insufficient service capacity, insufficient cord size or excessive cord length will cause overheating and burnout of the seaming machine's motor.

SIDELAP FIT-UP

Before seaming, inspect the full length of each roof panel sidelap. Check that the male and female are fully nested and the lip at the panel's male edge is enclosed by the hook of the adjacent panel's female edge.

Any conditions where the male and female are not fully nested or the male lip is not positioned inside of the female hook must be corrected before attempting to seam the roof panels.

CAUTION
Faulty seaming may occur where the male lip is not enclosed by the female hook and when the male and female are not fully nested. Such faulty seaming can result in seaming difficulty and objectionable seam appearance. In severe cases eduction in roof performance specifications.

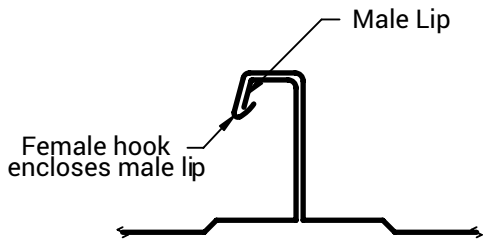

Correct

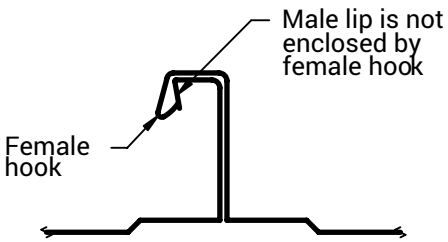

Wrong
(false seamed)

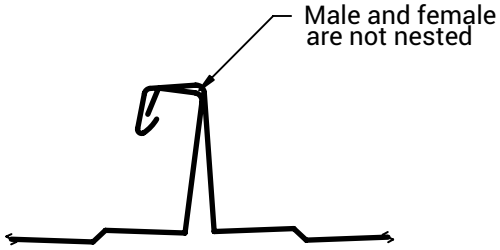

Wrong
(not nested)

CLIP ALIGNMENT

Before seaming, check that each roof panel clip is properly seated in the roof panel sidelap assembly. Any displaced clips must be corrected before attempting to seam the roof panels.

CAUTION
Misaligned panel clips can cause faulty seaming and objectionable seam appearance.

SEAM DAMAGE

Before seaming, check that the male and female edges are not kinked or otherwise distorted. Any such distortions must be corrected before attempting to seam the roof panels.

HAND SEAMING LEFT TO RIGHT

RIDGE, EXPANSION JOINT, OR HIGH EAVE

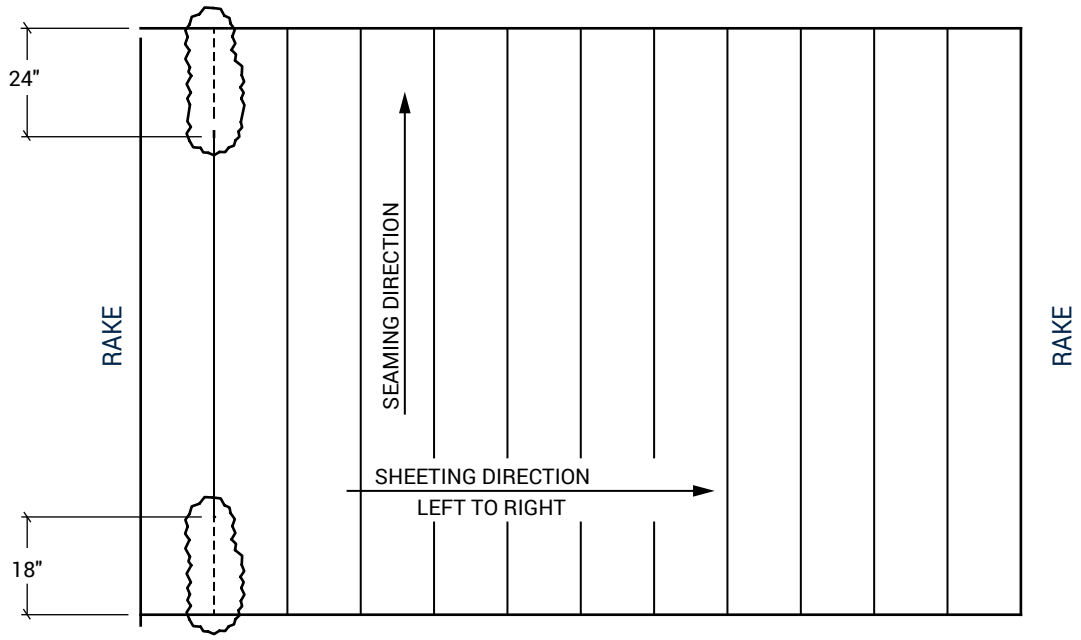

CRITICAL!
Panels do not have to be seamed as they are installed. However, to prevent panel separation by a strong wind, panels should be seamed as soon as possible.

NOTES:

1. The first 18" at the eave must be hand seamed before starting the electric seamer.
2. The distance shown in the above chart must be hand seamed at the high side before starting the electric seamer.
3. The end at the ridge, expansion joint, or high eave must be hand seamed before the ridge channel or end dams can be installed.

HAND SEAMING RIGHT TO LEFT

RIDGE, EXPANSION JOINT, OR HIGH EAVE

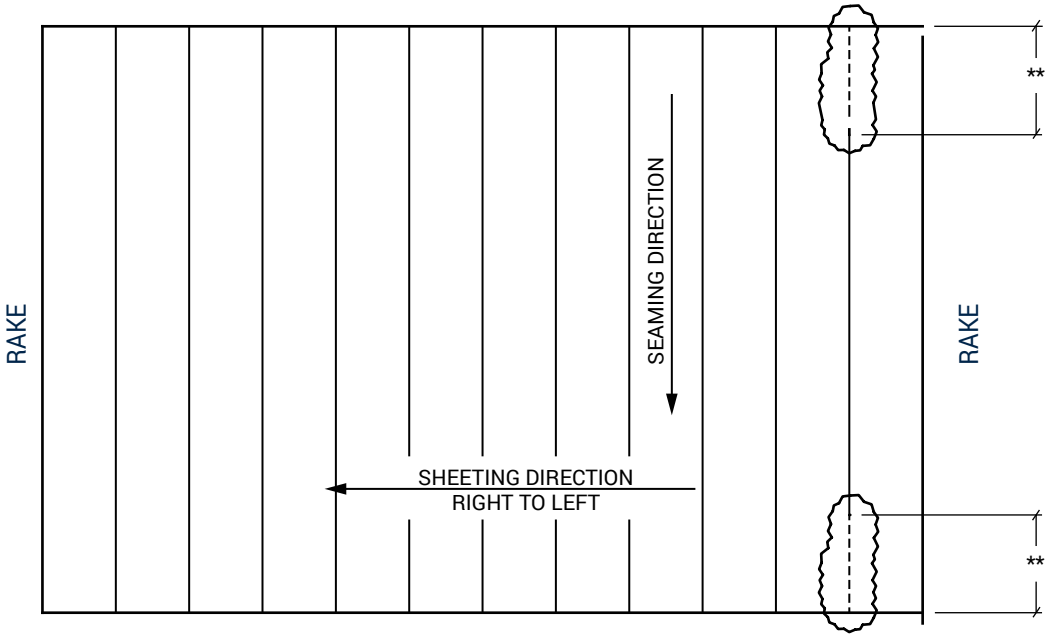

HIGH SIDE CONDITION	** DISTANCE TO HAND SEAM
Standard Ridge	18”
Standard High Side Eave	18”
High Side Eave w/Parapet, etc.	24”
Ridge Vent (Installed after Seaming)	18”
Ridge Vent (Installed Before Seaming)	30”
Longitudinal Expansion Joint	24”

NOTES:

1. The first 18” at the eave must be hand seamed before starting the electric seamer.
2. The distance shown in the above chart must be hand seamed at the high side before starting the electric seamer.
3. The end at the ridge, expansion joint, or high eave must be hand seamed before the ridge channel or end dams can be installed.

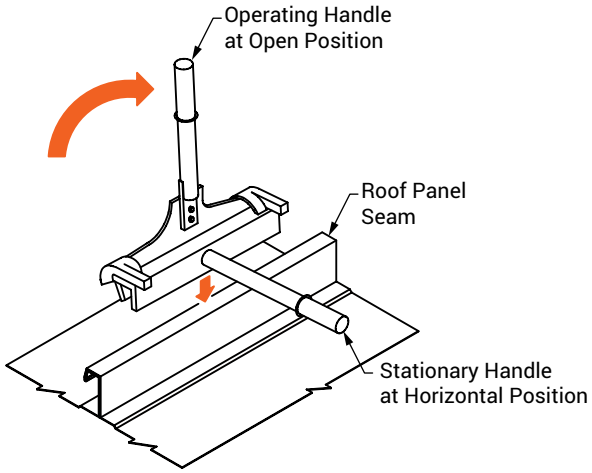

TOOL ORIENTATION TO SEAM

Orient the tool to fit correctly onto the roof panel seam as shown. The stationary handle must be in the horizontal position and the operating handle must be rotated up to the open position.

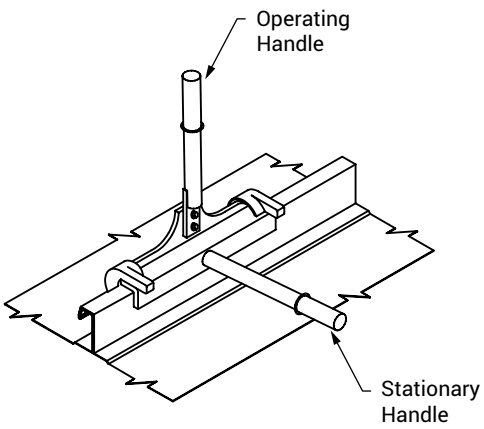

STEP 1

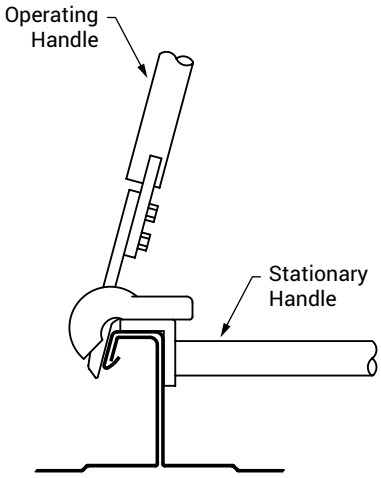

STEP 1

FORMING THE SEAM

When the tool is correctly positioned on the panel, push the stationary blade down solidly against the top of the seam. While holding the stationary handle in the horizontal position, rotate the operating handle down to the horizontal position. This will form the seam.

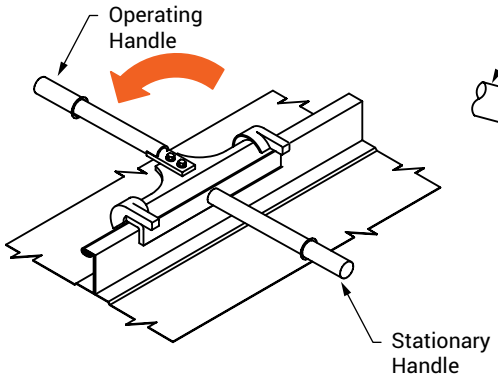

STEP 2

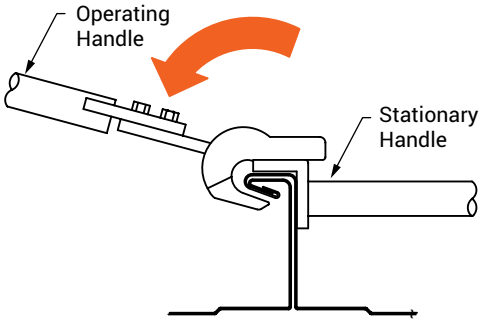

STEP 2

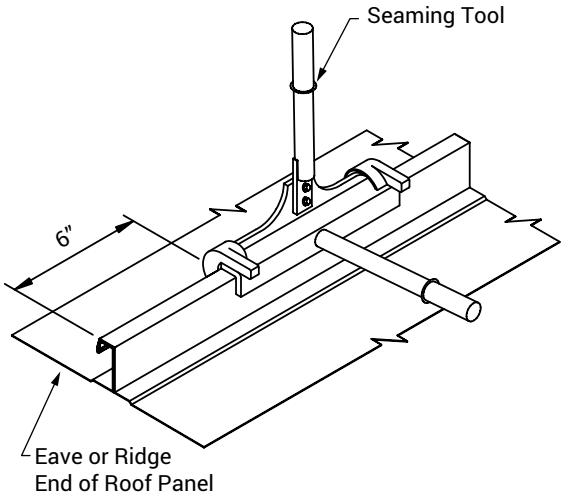

STEP 1

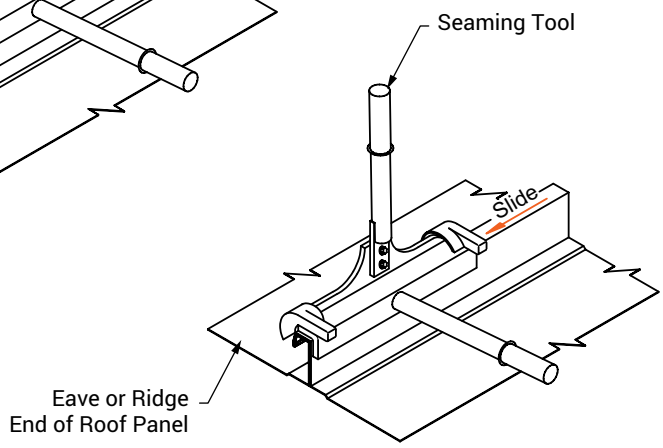

STEP 2

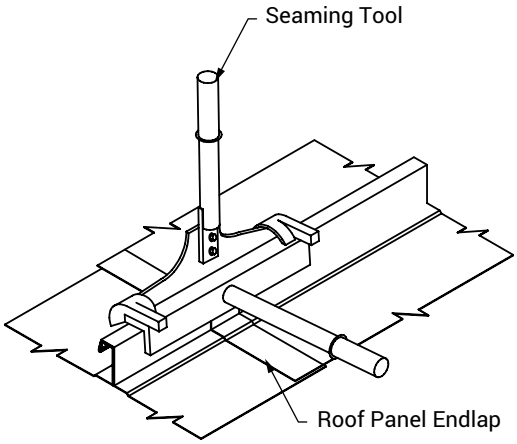

STEP 1

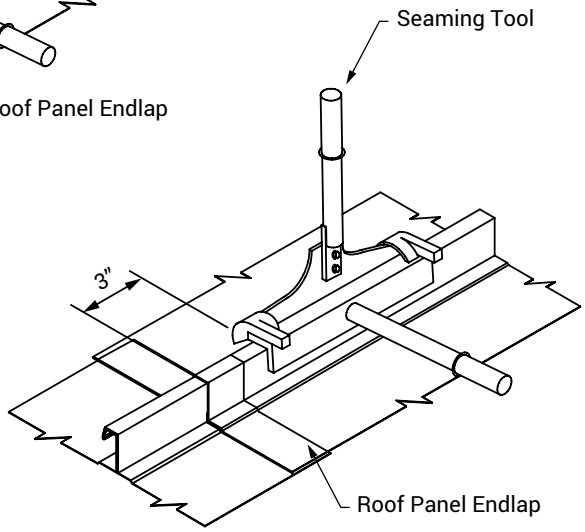

STEP 2

TOOL POSITION AT END OF ROOF PANEL

When seaming at the eave or ridge end of the roof panel, the seaming must be done in two steps.

For the first step, position the end of the seaming tool at 6” from the end of the roof panel and seam that area.

For the second step, position the end of the seaming tool flush with the end of the roof panel and seam that area.

TOOL POSITION AT ROOF PANEL ENDLAP

When seaming at a roof panel end-lap, the seaming must be done in two steps.

For the first step, center the tool over the endlap and seam that area.

For the second step, position the end of the tool 3” uphill from the edge of the endlap and seam that area. This is to allow the uphill “pig tail” sealant to properly flow and allow the motorized seamer to properly function at the lap.

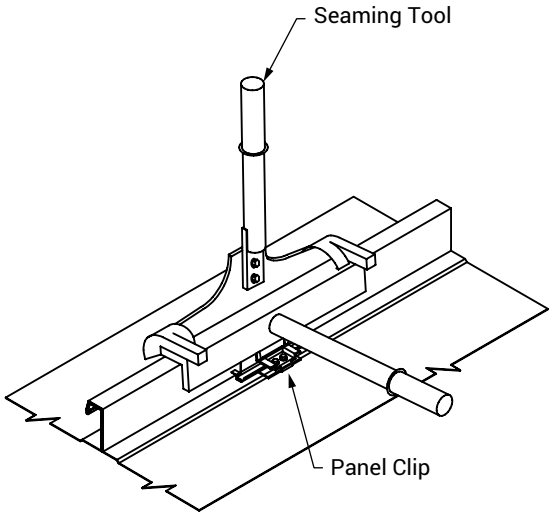

AT PANEL CLIPS

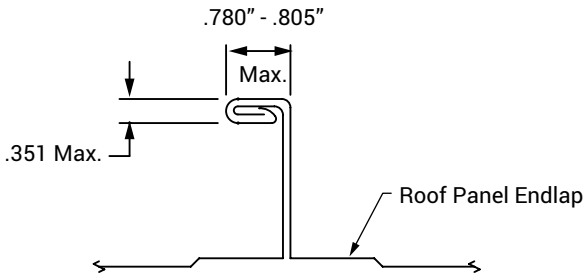

TOOL POSITION AT PANEL CLIPS

When seaming at a panel clip location, center the tool over the panel clip and seam that area. Hand crimp should include all of clip and extend uphill and downhill of clip by a minimum of 6".

CHECKING THE FINISHED SEAM

Rotate the operating handle to the open position, remove the tool and check that the seam is correctly formed, as shown on the detail below.

CAUTION
If the manual seaming tool does not correctly form the seam, do not continue seaming but contact Whirlwind Steel, Inc. for instructions.

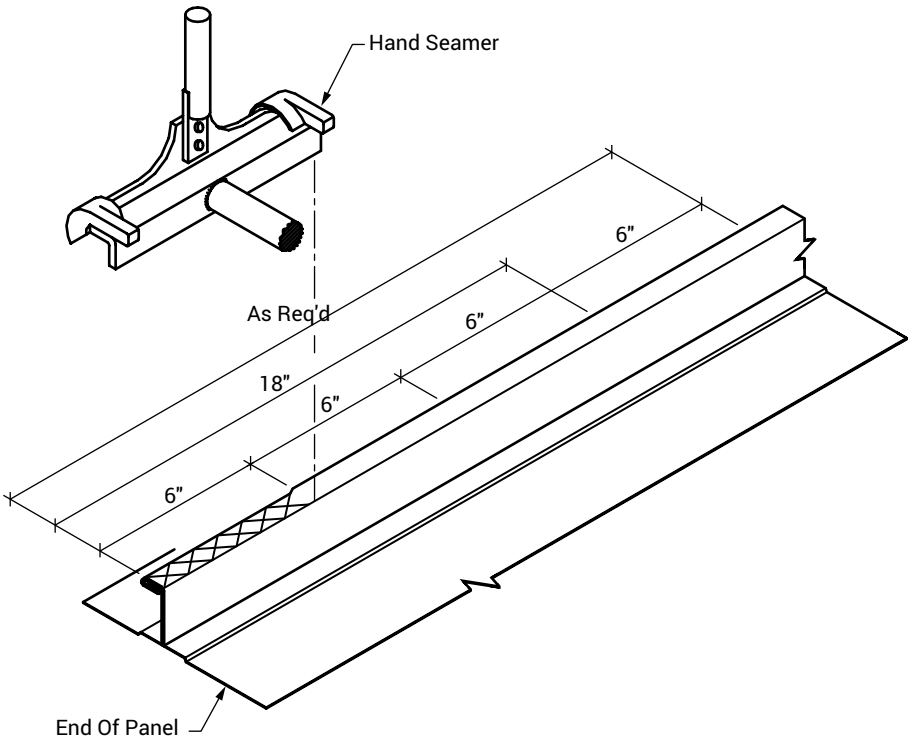

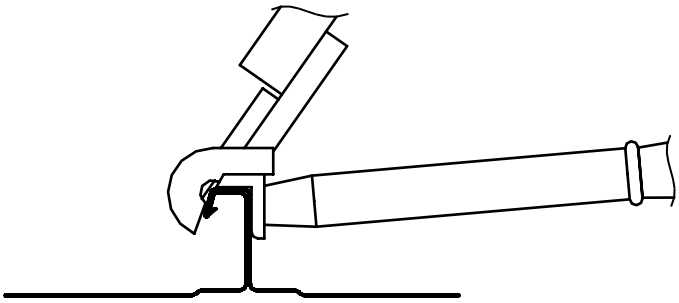

HAND SEAMER STARTING POSITION

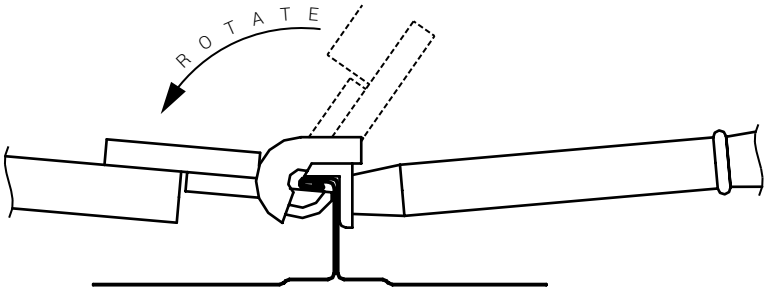

HAND SEAMER FINISHING POSITION

1. Hand seam approximately 6" of panel each time.
2. Care should be taken when using the hand seamer to avoid scratching the panel. Place the hand seamer tight against the vertical rib of the panel as shown in the starting position illustration.
3. Rotate the handle in the direction shown until the seam is closed (approximately 120°).
4. Hand seam approximately 6" of panel each time.
5. Care should be taken when using the hand seamer to avoid scratching the panel finish.

CRITICAL!
Panels do not have to be seamed as they are installed. However, to prevent panel separation by a strong wind, panels should be seamed as soon as possible.

OPERATING THE MOTOR SEAMING MACHINE

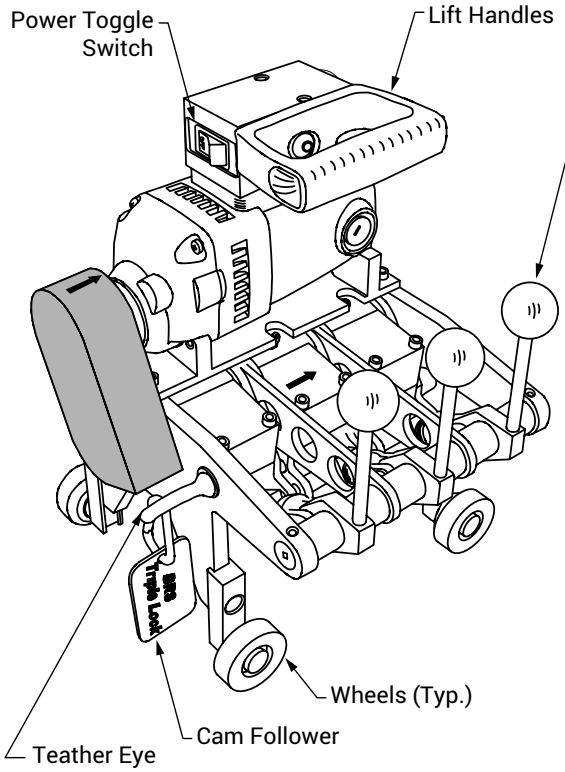

TRAILING END

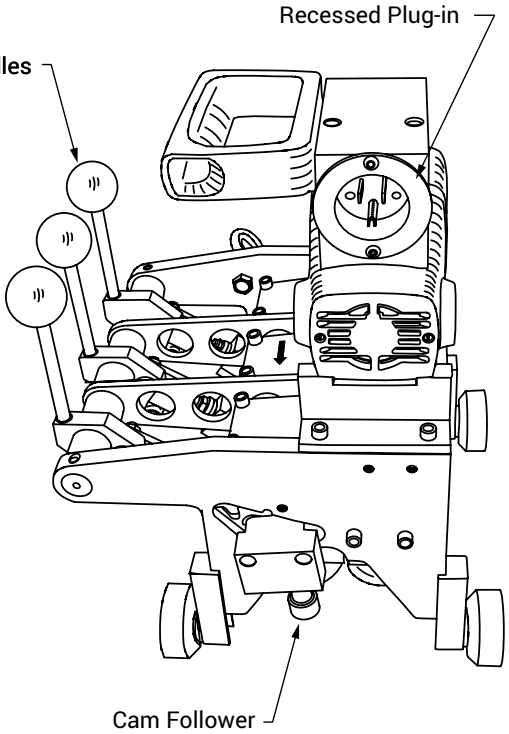

LEADING END

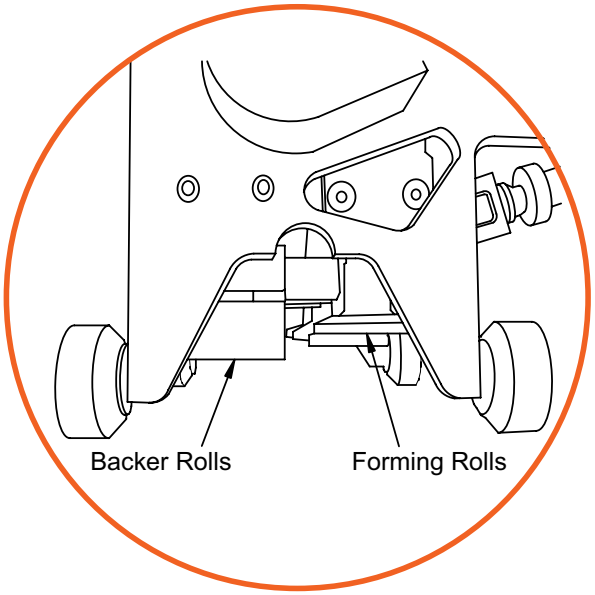

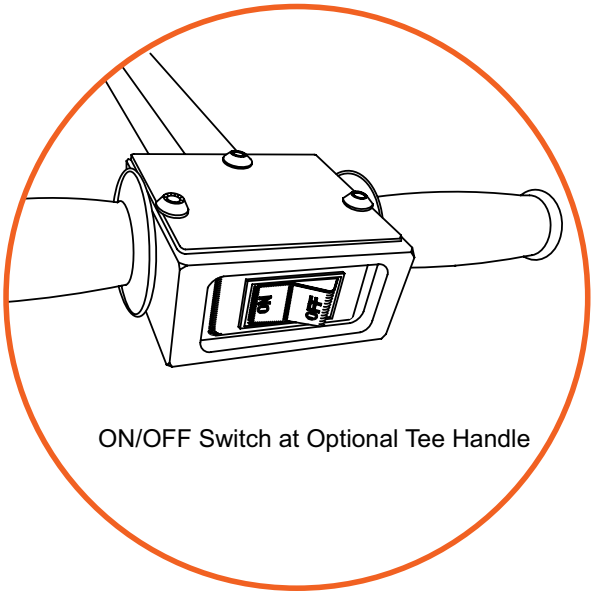

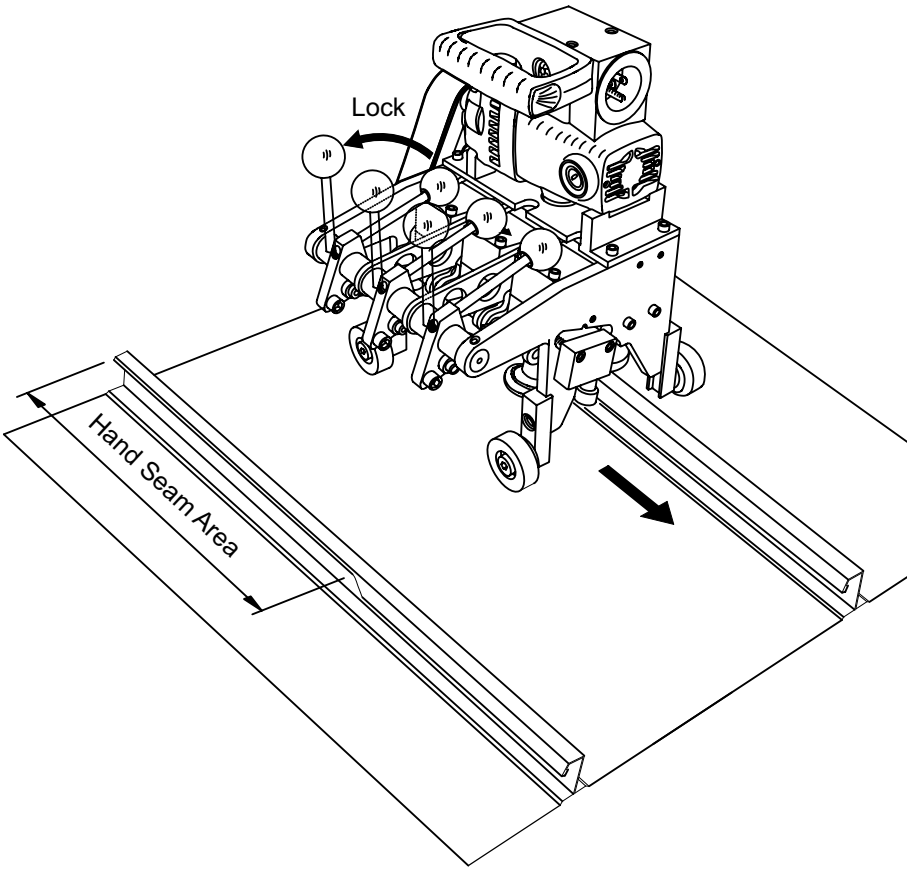

MACHINE ORIENTATION TO SEAM

On roofs sheeted from left to right, the seaming machine will run from the eave to the ridge. Refer to pages 58 and 59 for seaming direction.

MACHINE POSITION ON ROOF PANEL

With the locking handle held up in the open position, set the seaming machine onto the starting end of the roof panel's seam over the manually seamed portion of the seam.

Roll the seaming machine forward to align the front seaming rolls over the un-seamed portion of the seam as shown in the detail below.

When the machine is in the correct position on the seam, pull the locking handle out to the locked position. The locking handle should lock with minimal resistance when force is applied.

On roofs sheeted from right to left, the seaming machine will run from the ridge to the eave for one directional machines.

If the locking handle will not readily lock, roll the machine forward or backward slightly until a position is found where the locking handle will readily lock. If the locking handle still does not lock, check the hand seaming to be sure it is in the proper form.

Once the locking handle is locked, check that the forming rolls are properly engaged.

CLEAN THE SEAMS

The roof panel seams must be thoroughly cleaned of abrasive dirt or dust that can cause scuffing or scratching of the seam surface. The roof panel seams must be cleaned of grease or other contaminants which can cause seaming machine slippage and marking of the seam surface.

RUNNING THE MACHINE

Check that the machine's path is clear of power cords, tools, debris, teether lines, etc.

Start the machine by turning on the machine's toggle switch.

Watch the machine and finished seam carefully for any indications of machine malfunction or faulty seaming.

CAUTION
The seaming machine must always be in the vertical position while seaming. Do not allow the machine to tilt sideways when locking the machine onto the seam or while the machine is running. On roofs with high stand-off clips, walking or standing on the panel next to the machine can deflect the panel and cause the machine to tilt. Do not walk or stand on the panel next to the machine while it is running.

STOPPING THE MACHINE

Stop the machine by turning off the machine's toggle switch. Always allow sufficient space for the machine to coast after turning the machine off. Do not run the machine into previously installed end dams or other obstructions.

CAUTION
Stop the machine immediately and investigate any indications of machine malfunction or faulty seaming.
If the machine does not correctly form the seam, do not continue seaming but call Whirlwind Steel Buildings, Inc. for instructions.

UN-LOCKING THE MACHINE

After the machine is turned off and has fully stopped, lift up the locking handle to the open position to un-lock the machine from the seam.
Using the lift handle, the machine can be lifted from the seam.

If the machine must be stopped and removed before completing the seam, use a felt marker to mark the position of the machine's front wheel on the panel. The machine can later be repositioned on the mark to complete the seaming.

CHECKING THE FINISHED SEAM

At the completion of each seam, check the full length of the seam for any indications of faulty seaming. Refer to page 62 for details of the correctly formed finished seam. The seaming operation exerts high pressure bending forces on the seam. Under such conditions, minor burnishing, pressure marks, and black oxide marking of the seam surface is normal.

CAUTION
Black oxide marking is often mistaken to be damage of the seam surface. Objectionable black oxide can be removed with mild cleaning solutions or solvents.

GENERAL

Although designed for tough industrial use, the seaming machine requires proper maintenance to assure proper seaming and efficient, trouble free operation.

CAUTION
Failure to properly maintain the seaming machine as instructed below can result in faulty or damaged seams and costly break-down of the seaming machine.

SEAMING ROLLS

The seaming rolls require the following regular maintenance:

1. Assure that the seaming machine's seaming rolls are free of dirt, grease, sealant, etc.
2. Spray the seaming rolls with WD-40 (or equal) to prevent corrosion and minimize Galvalume build-up on the rolls.
3. Assure that the seaming machine's seaming rolls are tight on their shafts. Check and tighten the rolls' retainer screws as necessary.
4. On painted roofs, especially during very hot or abrasive conditions, spraying or misting the seams with water, or a light lubricant such as WD-40, ahead of he seaming machine may significantly reduce burnishing and oxide marking of the seam surface.
5. On very dry Galvalume roofs, spraying or misting the seams with water, or a light lubricant such as WD-40, ahead of the seaming machine may significantly reduce seaming friction and Galvalume build-up on the seaming rolls.

COOLING VENTS

To prevent motor overheating, the motor has vents and an internal fan to provide a cooling air flow over the internal motor parts.

The cooling vents are located at the front and rear of the motor. At the front of the motor, the vents are the slots between the motor housing and the gear box. The rear vents are on the end of the motor housing. Check frequently to assure that these vents are kept clean and clear of debris, stringing sealant, etc.

While the machine is running, never cover the machine or place it in a position where the cooling air flow to the vents will be restricted.

WHIRLWIND

WEBUILDFORLIFE

WHIRLWINDSTEEL.COM
(800) 324 9992